ITER-India, Institute for Plasma Research
Block A, Sangath SKYZ, Bhat- Motera Road, Koteshwar, Ahmedabad 380005 Gujarat,India. Ph.No. : +91-79-23269656/9575 FAX : +91-79-23269591 / 9501
Email : purchase@iter-india.org
www.iter-india.org

ENQUIRY - LOCAL

OFFICE COPY

ENQUIRY NO : **I-IEN19034**
Date : **17/09/2019**
Due Date : **09/10/2019** by 1:00 PM (IST)

We invite your rate/s for the following item/s. The Instructions to bidders and Terms & Conditions are attached herewith.

Important Note :

1. Enquiry No., Date & Due Date should appear on the envelope otherwise your offer will be rejected.
2. Address quotation only to the Purchase officer.
3. ITER-India, IPR is entitled to avail concessional rate of GST @ 5% (2.5% CGST and 2.5% SGST) as per Central Goods and Services Tax (CGST) Notification No. 45/2017-Central Tax (Rate) dated 14th November, 2017, State Goods and Services Tax (SGST) Notification No. 45/2017 – State Tax (Rate) dated 15th November, 2017 and IGST @5% as per Notification No. 47/2017-Integrated Tax (Rate) dated 14th November, 2017 for supply of Goods. Therefore, please consider GST in your quotation accordingly.

Sr No.	Material Description	Quantity	Unit
1	CAPACITOR SCREW TYPE AS PER DRAWING NO : II/ICH/HPA-2/CG/00	1	NOS
2	CAPACITOR PRESS FIT TYPE AS PER DRAWING NO : II/ICH/HPA-2/PT/01 TO 04	1	SET
3	REDUCER 3 TO LC TYPE ASSEMBLY AS PER DRAWING NO: II/ICH/REDUCER/3-LC/00	4	NOS
4	SWITCH PARTS AS PER DRAWING NO : II/ICH/SW/01 TO 03	1	SET

Note :

(1) Submit your quotation AT THE ABOVE ADDRESS.

(2) Any clarification on this enquiry may be sought from the Purchase Officer, ITER-India

(3) Quote with complete technical details.

(4) Quotation should invariably be submitted in the attached format (Quotation Format) ONLY else ITER-India may not consider your offer.

(5) Attached herewith Technical Specifications Annexure -A, Annexure I to IV for Engineering drawings. (Total pages 30)

(6) Bidders are requested to fill the Table-III in Technical specification (duly signed and stamped) and return back along with the enquiry documents.

(7) Payment shall be made within 30 days from the date of final acceptance of ordered items of purchaser's site and on receipt of error free invoice and other necessary documents at our end.

(8) The bidder under the category of MSME Enterprise shall attach a MSME Certiicate (Udhyog Aadhar) along with the offer.

(9) Datasheet/Catalogue of the offered items to be submitted along with the offer.

(10) Purchaser reserves the right to split the order.

Encl:- as above

Rakhi Dharamdasani
OFFICER-I (PURCHASE & STORES)
ITER-India (IPR)

TERMS AND CONDITIONS

1. The quotation and any order resulting from this enquiry shall be governed by our Conditions of Order and supplier quoting against this enquiry shall be deemed to have read and understood the same into
2. Where counter terms and conditions have been offered by the Tenderer, the same shall not be deemed to have been accepted by ITER-India unless our specific written acceptance thereof is obtained.
3. Quotation: Your quotation superscripting our enquiry No., date, due date and brief description of item should be submitted to the Purchase Officer, ITER-India in sealed envelope on or before the due date. Late/ Delayed/incomplete quotations will not be considered. Envelopes received without Enquiry number, date, due date and brief description of item may be rejected. The quoted prices should be firm for a period of 90 days from due date for placing order. ITER-India is not bound to accept lowest rate/s. Bidder shall submit the price bid/offer on Bidder's letter head with official seal and sign on each page.
4. The bid documents shall be prepared in English language only
5. All pages of the bid documents shall be numbered. Each page of the bid document shall be stamped and initialized.
6. In the event of any date indicated above is a declared Holiday, the next working day with the same time limit shall become operative for the respective purpose mentioned herein
7. In case of deviation in payment terms including demand of advance other than specified in payment schedule and accepted by ITER-India, prevailing Prime Lending Rate (PLR) of SBI will be loaded for price comparison purpose
8. ITER-India and their authorized representatives may visit the Contractor/Sub-contractors if required as part of technical evaluation process
9. ITER-India reserves the right to place order on one or more parties.
10. Specifications: Material should be offered strictly conforming to our specifications/drawings, if any. Deviation, if any, should be clearly indicated by the supplier in their quotation. The Tenderer should also indicate the Make/Type number of the materials offered and catalogues, technical literature and samples, wherever necessary should accompany the quotation. Clarification/s on specifications/drawings should be obtained from Purchase Officer before submitting quotation.
11. Terms of Prices : Quotation should be submitted on door delivery basis, duly packed & insured without extra charge wherever possible.. In the case of Indian suppliers, the material is to be delivered at our stores free of charge duly packed & insured.
12. Unit rate/s should be valid throughout the validity of Purchase Order for addition/deletion purposes. Break-up of price should be furnished. The quoted price should not be subject to price escalation for whatsoever reasons. The quoted price shall be firm, fixed and non-revisable during the validity/ extended validity of Purchase Order.
13. Prices are required to be quoted according to the units indicated in the tender form/Enquiry. When Quotations are given in terms of units other than those specified in the tender form, relationship between the two sets of units must be furnished.
14. Tender should be free from Correction and Erasures. Corrections, if any, must be attested. All amounts shall be indicated both in words as well as in figures. Where there is difference between amounts quoted in words and figures, amount quoted in words shall prevail. Unsigned quotations will summarily be rejected.
15. ITER-India shall be under no obligation to accept the lowest or any tender and reserves the right of acceptance of the whole or any part of the tender or portion of the quantity offered and the tenderers shall supply the same at the rates quoted. ITER-India also reserves the right to split the order at its sole discretion.
16. Octroi is not applicable at present.
17. Delivery Date/Period: Delivery period is essence of the Order. Supplier must indicate the firm delivery date by which the materials will be dispatched / delivered by them from the date of our order.
18. Delivery period shall be clearly indicated against each item separately.
19. Inspection: Materials on its arrival at ITER-India will be inspected by our Engineer/Stores In-Charge, and his decision in the matter will be final. However, where the items are required to be inspected at the Suppliers Premises, Supplier has to give advance notice to the Purchaser regarding readiness of the material to enable Purchase/Stores section to depute his representative for inspection.
20. Payment: Payment will be arranged for accepted materials only within 30 days from the date of acceptance of materials at ITER-India and receipt of error free bills in our accounts section, complete in all respects.
21. No correspondence will be entertained within 30 days from the date of receipt of material and bills, whichever is later.
22. Warranty: The Stores/Items offered should be guaranteed for a minimum period of twelve months from the date of acceptance, against defective materials, design, workmanship, operation or manufacture. For defects noticed and communicated during the Guarantee period, replacement/rectification should be arranged free of cost within a reasonable period of such notification. In case where our specifications call for a guarantee period more than 12 months specifically, then such a period shall apply.
23. The Contractor/Supplier shall at all times indemnify the purchaser against all claims which may be made in respect of the stores for infringement of any right protected by Patent, Registration of design or Trade Mark and shall take all risk of accidents or damage, which may cause failure of supply from whatever cause arising and the entire responsibility for sufficiency of all means used by him for the fulfillment of the Order.
24. Successful tenderer will have to furnish in the form a Bank Guarantee or in Indemnity Bond form as called for by the Purchaser towards adequate security for the materials/property provided/issued by the Purchaser as Free Issue Material for the due execution of the Order. Insurance for the Free Issue Material shall be arranged by the Supplier/Contractor at his risk and cost.
25. Non-compliance to tender specifications and/or tender scope and/or tender terms and conditions are liable for rejection. Decision of ITER-India in respect of non-compliance shall be final and binding on the bidders.
26. Canvassing in any form with regard to this tender will lead to rejection of the bid.
27. The Project Director, ITER-India reserves the right to accept or reject any quotations fully or partly or to cancel the enquiry without assigning any reasons.
28. This enquiry is not a commitment and the Purchaser reserves the right to reject or cancel any or all offers.
29. Jurisdiction: The Order shall be governed by the Laws of India for the time being in force. The Courts of Ahmedabad/Gandhinagar only shall have jurisdiction to deal with and decide any legal or dispute arising out of this Order.
30. Unsuccessful bidders will not be intimated about the results of the enquiry/tender.
31. Purchase will not be responsible for payment of any interest to the Supplier, in case of delay in releasing payment.
32. The price evaluation shall be carried out on Landed price.

FORMAT FOR SUBMISSION OF QUOTATION

Enquiry No. : **I-IEN19034**
Name Of Party : **OFFICE COPY**
Quotation No. & Date :
Due on : **09/10/2019** by 1:00 PM (IST)

Sr No.	Material Description	Qty	Unit	Rate	Total
1	CAPACITOR SCREW TYPE AS PER DRAWING NO: II/ICH/HPA-2/CG/00	1	NOS		
2	CAPACITOR PRESS FIT TYPE AS PER DRAWING NO : II/ICH/HPA-2/PT/01 TO 04	1	SET		
3	REDUCER 3 TO LC TYPE ASSEMBLY AS PER DRAWING NO: II/ICH/REDUCER/3-LC/00	4	NOS		
4	SWITCH PARTS AS PER DRAWING NO: II/ICH/SW/01 TO 03	1	SET		
				Grand Total	

COMMERCIAL TERMS & CONDITIONS *

Sr.No	Description	Bidder's Response
1	Free Door delivery	Comply Yes/No (In case of No Please provide details)
2	Packing & Forwading (To Specify, if any)	
3	Safe Delivery Charges (Please mention if not included in rate mention above)	
4	GST (Not to be included in quoted rates)	
5	GST @ 5% Extra (Refer Sr.No.3 of Important Note)	Comply Yes/No (In case of No Please provide details)
6	Delivery Period (4 months from the date of order)	Comply Yes/No (In case of No Please provide details)
7	Payment:ITER-India payment terms will apply (Refer Sr. No. 7 of Note)	Comply Yes/No (In case of No Please provide details)
8	Warranty (Refer Sr. No. 22 of Terms and Conditions)	Comply Yes/No (In case of No Please provide details)
9	Validity Period (Refer Sr.No. 3 Of Terms and Condition)	Comply Yes/No (In case of No Please provide details)
10	GST Registration No. (To specify)	
11	HSN Code	
12	Udhyog Aadhar No. & Categpry (Micro/Small/Medium Enterprise)	
13	Discount (If any)	
14	Remarks	

* Fill in the applicable details

Place:
Date:

Authorised Signatory:
Company Seal

Fabrication and Assembly of Capacitor screw & press fit, 3 to LC type reducer assembly and switch parts

Technical specifications & terms

1. Scope of Work

a) Procurement of material required for all the assemblies and submission of test certificate to ITER-India for approval.

b) After ITER-India approval of above mentioned requirements, fabrication/ manufacturing of following assemblies shall be started:

Sr. No	Assembly Details	Quantity	Engineering Drawings
1	Capacitor screw type (Drawing no : II/ICH/HPA-2/CG/00)	1 No	Annexure-I
2	Capacitor press fit type (Drawing no : II/ICH/ HPA-2/PT/01 to 04)	1 Set	Annexure-II
3	3 to LC Type reducer assembly (Drawing no : II/ICH/REDUCER/3-LC/00)	4 Nos	Annexure-III
4	Switch Parts (Drawing no : II/ICH/SW/01 to 03)	1 Set	Annexure-IV

c) Receipt of Free Issue Material (FIM) from ITER-India as per section 3

d) All the fastener and heli-coil inserts required for assembly are under vendor's scope and material of fastener & Heli-coil insert should be SS 304.

e) Inspection of individual components at vendor's site in presence of ITER-India representative. The fabricated components shall confirm to the technical specifications, drawings and standards as per tender document.

f) Assembly of entire system to confirm the mechanical integrity.

g) Integration of entire system at the vendor's site in presence of ITER-India representative (s).

h) Submission of pre-dispatch inspection report to ITER-India for dispatch clearance certificate.

i) Delivery of items to ITER-India lab, ITER-India site with adequate packing to avoid damage during transportation.

j) Un-packing & Assembly at ITER-India site.

k) Providing one year warranty from the date of all components received.

2. Free issues material

Sr. No.	Material	Quantity	Remarks
1	Kapton Sheet	1 Nos	**Length 460 x width 122 x 0.125 thickness**

3. Material Procurement

The system is fabricated from the following grades of materials:

- Copper – grade ETP (99.9%Cu), Cu Sn 12 P, Cu Zn 39 Pb2
- SS 304, Z2 CN 18/10
- Aluminum alloy 6061-T6 grade
- Forged Brass 60-40 commercial grade
- Teflon rod PTFE ASTM D1710-8,11B/ teflon plate PTFE ASTM D3294-03, 11A
- Derlin 100P
- Ultem 2100 R STD

It is highly recommended that to check the requirements from the attached engineering drawings.

4. Precaution during Fabrication and Assembly

- No modification in the drawing or design is permitted except in case where it is necessary to facilitate manufacturing without changing the function, accuracy and strength of the component. Provide prior justification and drawings to the IPR representatives for approval before implementing on it.

- All sharp edges should be avoided and rounded off.

- Surface irregularities, scratches, dents and tool marks are not allowed on the surfaces.

- Holes should be drilled with essential matching of various parts, wherever applicable.

- The inner surface of outer conductor and outer surface of inner conductor should be machined up to ∇∇∇ wherever mentioned in the drawings, otherwise ∇∇ finishes if not mentioned in the drawings.

- Necessary machining shall be done to get the required straightness, roundedness, perpendicularity and concentricity (as applicable).

- The welding joints are TIG welded with full penetration.

- Brazing rods need to have 60% silver contents

5. Coating/ Plating

- Silver plating of 50 micron thickness shall be done as mentioned in attached drawings

6. Inspection & Testing

General guidelines for Inspection are written below for preparation of procedure:

I. Quality checks :

(a) The material used in the system will be checked for its required properties to confirm on the material grade, based on the test certificate submitted by the vendor.

(b) All the individual components shall be inspected for its dimensional accuracy, brazing/welding, assembly performance and surface finish requirements as per the drawings and specifications.

(c) Supplier shall arrange all gauges and measurement tools for measurements and inspection at their site.

II. Factory Acceptance Tests/Pre-dispatch Inspection :

Pre-dispatch inspection (including stage wise inspection) at manufacturer's / fabricator's place shall be carried out in presence of ITER-India representative (s) for material, performance, pressure, joints, check for mechanical integrity, dimensional requirements, positioning accuracy, functional requirements, assembly requirements etc.

7. Dispatch & Packing Requirements:

All components are required to be packed with standard soft material to avoid damages to the machined surfaces. All mating surfaces of flanges must be masked with proper covers to avoid damage during handling and transportation. Packing shall be sturdy and rigid enough to withstand shocks and vibrations during transportation of the system.

Any damage to the components during transportation or due to any other cause, will not be accepted and no compensation shall be paid by ITER-India for the same. The vendor shall take due care regarding packing and forwarding of the system. It is the liability of the vendor to deliver the system in perfect working condition to ITER-India. Damaged components will be repaired/ replaced by vendor at free of cost.

8. General Terms and Conditions:

1. All the machined surfaces should be 2 -delta finish otherwise mentioned.
2. All the threads should be in metric system or otherwise as mentioned in drawings.
3. Suitable fasteners for assembly should be made of SS 304.

9. Outer & Inner Conductor Details:

1. Roundness of the tubes should be within 0.8 % of average outer diameter.
2. Eccentricity not to exceed 8% of average wall thickness.
3. Curvature should not exceed 5 mm over any 1600 mm of length.

10. Delivery Time

Delivery should not be delayed in any case beyond four month after getting confirmed purchase order from ITER-India.

11. Delivery Location:

3rd Floor, ITER-India Lab,
Institute for Plasma Research
Near Mother Dairy, Bhat Village,
Gandhinagar-382 428, Gujarat, India

12. Free issues material cost

Sr. No	Item Details	Quantity	Unit Price in Rs	Total Price in Rs
1	Kapton Sheet	1 Nos	1650/-	1650/-

13. Note:

The bidder should fill the table-III and return back along with the offers

Table-III

Sr. Nos.	IPR Specifications	Bidder Specifications	Complied? Yes / No	Remarks
1	Procurements of material required for all assemblies.			
2	Submission of material test certificate to ITER-India for approval.			
3	Fabrication of components as per Drawings attach			
4	All the SS 304 fastener & heli-coil insert are under biddes scope			
5	Silver plating shall be done as mentioned in drawings			
6	Inspections of individual components at bidder site as per section 6 II (a)			
7	Assembly of entire system to confirm the mechanical integrity			
8	Integration of entire system at the bidder site in presence of ITER-India representative(s)			
9	Submission of pre-dispatch inspection report to ITER-India for dispatch clearance certificate			
10	Delivery of items to ITER-India site with adequate packing to avoid damage during transportation.			
11	Un-packing and Assembly, at ITER-India site			
12	Providing one year warranty from the date of all components received			

Annexure – I

Engineering drawings

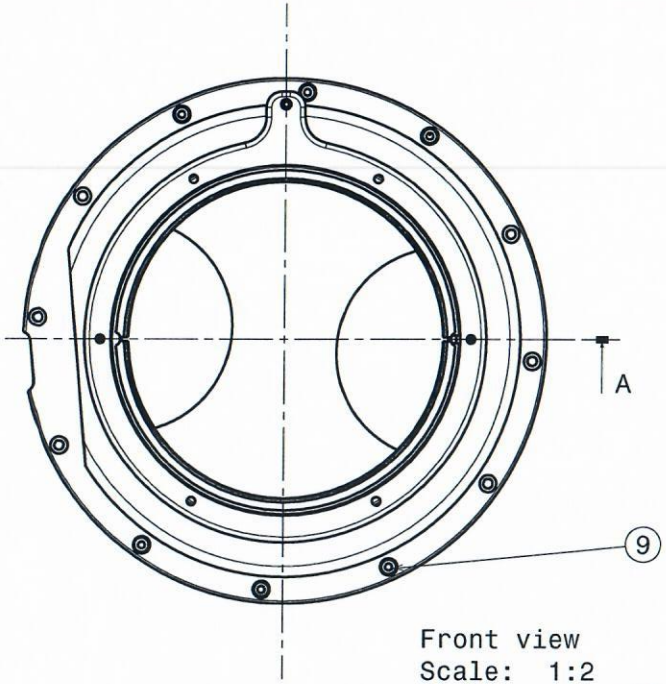

Front view
Scale: 1:2

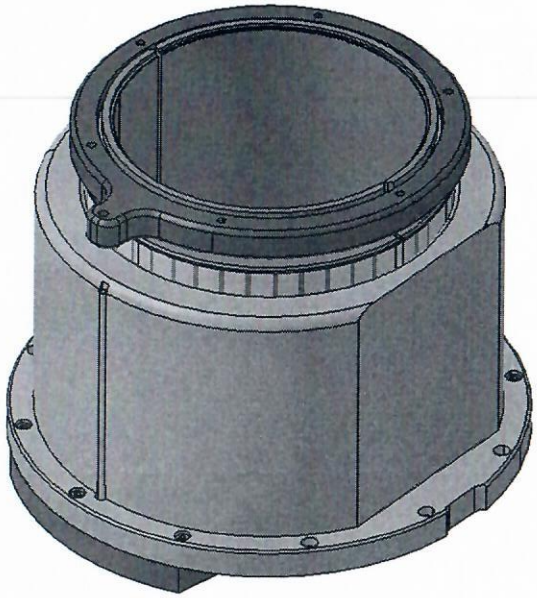

Isometric view
Scale: 1:2

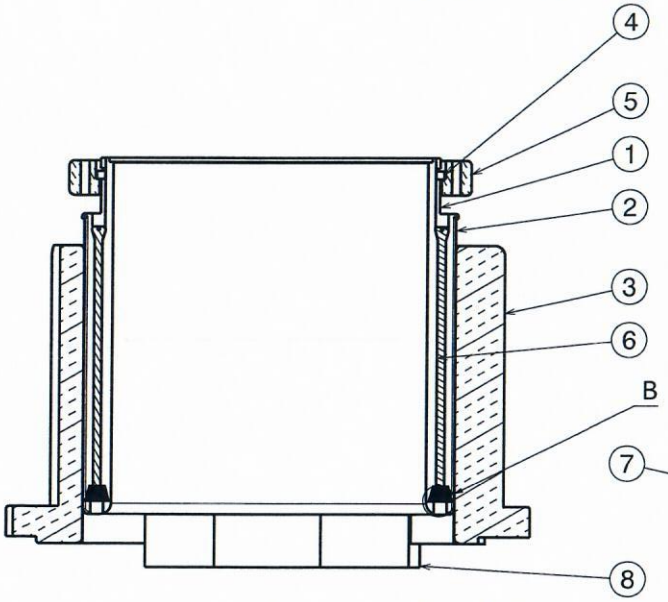

Section view A-A
Scale: 1:2

Detail B
Scale: 2:1

PART NO	PART NAME	DESCRIPTION/MATERIAL	QTY
9	CAP SCREW M3 X 16L	SS 304	6
8	BASE	II/ICH/HPA-2/CG/08	1
7	NUT	II/ICH/HPA-2/CG/07	4
6	SCREW	II/ICH/HPA-2/CG/06	4
5	FLANGE	II/ICH/HPA-2/CG/05	1
4	RING	II/ICH/HPA-2/CG/04	1
3	OUTER CONDUCTOR	II/ICH/HPA-2/CG/03	1
2	KAPTON (FIM)	II/ICH/HPA-2/CG/02	1
1	INNER CONDUCTOR	II/ICH/HPA-2/CG/01	1

DRW DOC ID
LINKED EV5 PT ID
PBS TITLE
REV DATE: 01/08/19
PT MATURITY
PT VERSION
SHEET SIZE: -
SCALE: NTS
PT Status
THIRD ANGLE PROJECTION
NO.OF SHTS: 01

RELEASED BY
APPROVED BY: P AJESH
CHECKED BY
CONTROLLED BY
DRAWN BY: P AJESH
PBS 3 LEVELS

ITER INDIA (IPR) GANDHINAGAR

CONFIDENTIAL UNLESS AUTHORISED

The information on this drawing is confidential under the terms of the ITER India agreement.This information shall not be transmitted to anyone who is not authorised to receive it.

ITER-India

DRAWING TITLE

SCREW TYPE CG CAPACITOR - HPA-2

DRAWING NUMBER: II/ICH/HPA-2/CG/00

SHEET: 01

REVISION

DR STATU

NO SCRATCHES OR ANY DAMAGE NOT ALLOWED

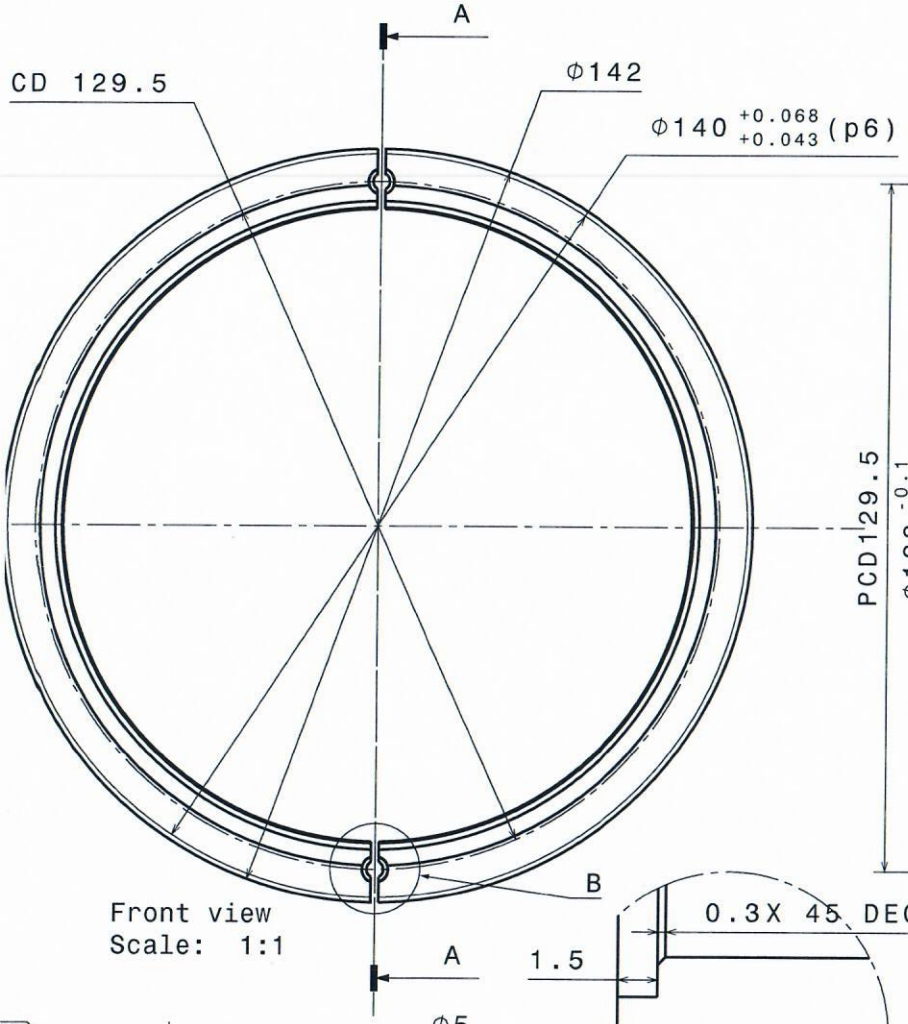

Front view
Scale: 1:1

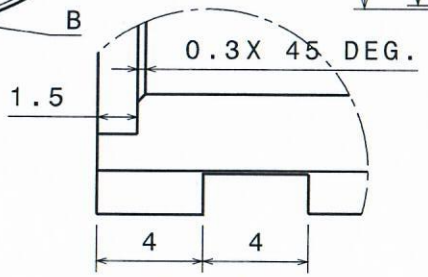

Detail C
Scale: 5:1

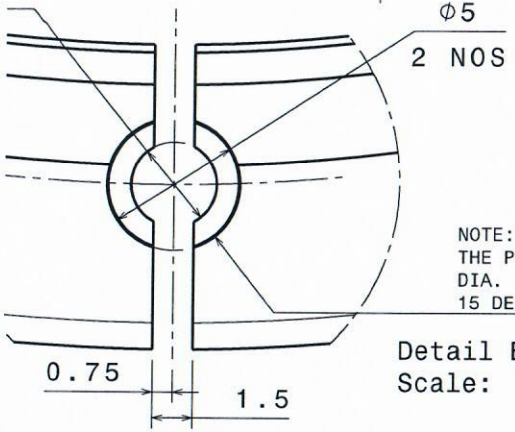

Detail B
Scale: 5:1

NOTE: AFTER MACHINING THE SLOT 1.5 MAINTAIN THE PART TIGHTRD AND MACHIN THE DRILLING DIA. 3.2 AND THE CONES DIA 5 WITH ANGLE 15 DEGREE

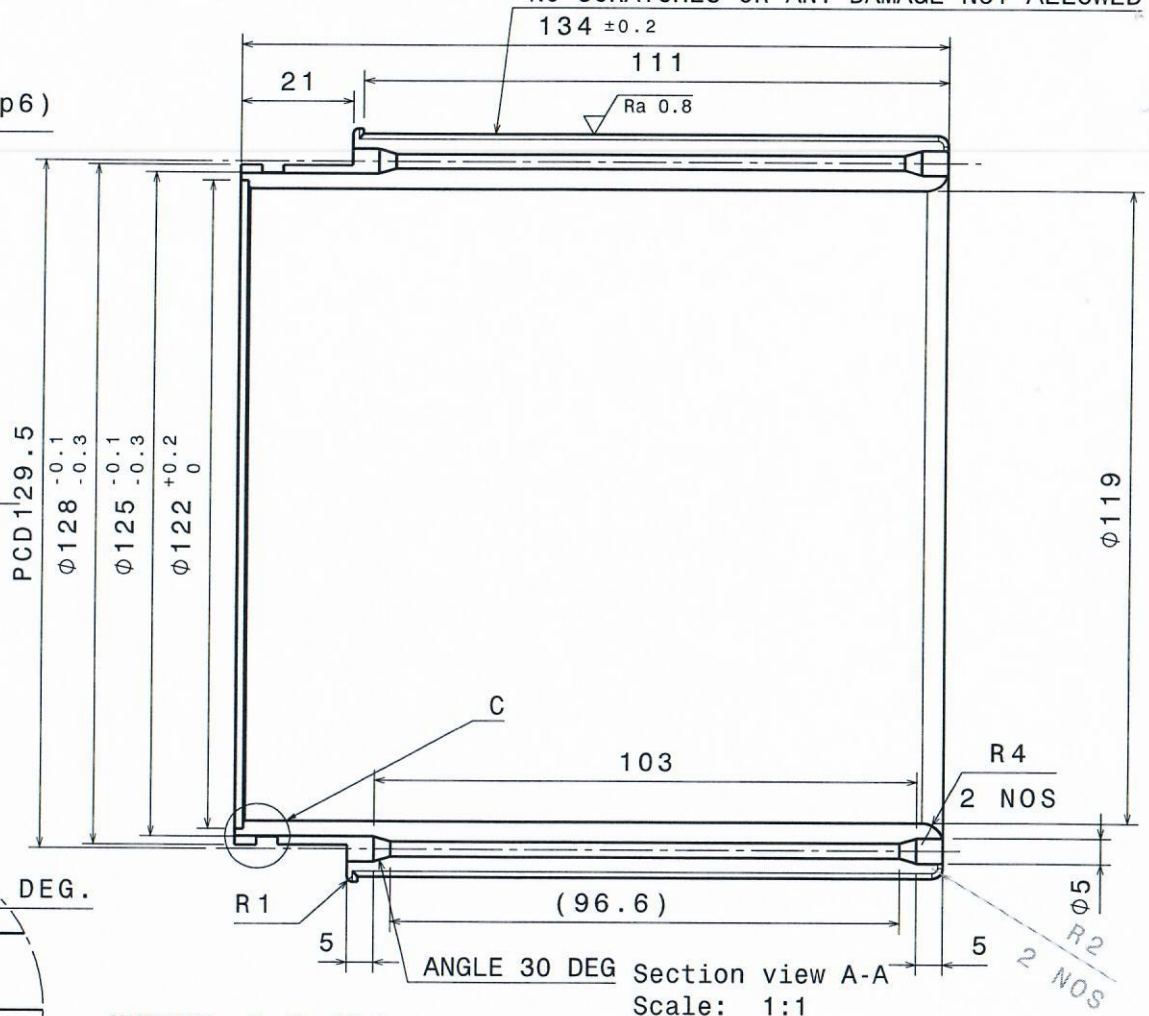

Section view A-A
Scale: 1:1

MATERIAL: Cu Sn 12 P
QTY: 01
SILVER PLATING/ COATING Ag15+Cu 3 MICRON FULL BODY
NOTE:INNER CONDUCTOR SHOULD BE MADE FROM SOLID ROD OR SEAMLESS HOLLOW PIPE

DRW DOC ID		RELEASED BY	ITER INDIA (IPR) GANDHINAGAR
LINKED EV5 PT ID		APPROVED BY: P AJESH	CONFIDENTIAL UNLESS AUTHORISED — The information on this drawing is confidential under the terms of the ITER India agreement.This information shall not be transmitted to anyone who is not authorised to receive it.
PBS TITLE		CHECKED BY	ITER-India
REV DATE: 01/08/19	PT MATURITY / PT VERSION	CONTROLLED BY	DRAWING TITLE: INNER CONDUCTOR
SHEET SIZE: -	SCALE: NTS / PT Status	DRAWN BY: P AJESH	CG CAPACITOR - HPA-2
THIRD ANGLE PROJECTION	NO.OF SHTS: 01	PBS 3 LEVELS	DRAWING NUMBER: II/ICH/HPA-2/CG/01 — SHEET: 01 — REVISION OR STATU

'vation for the banner

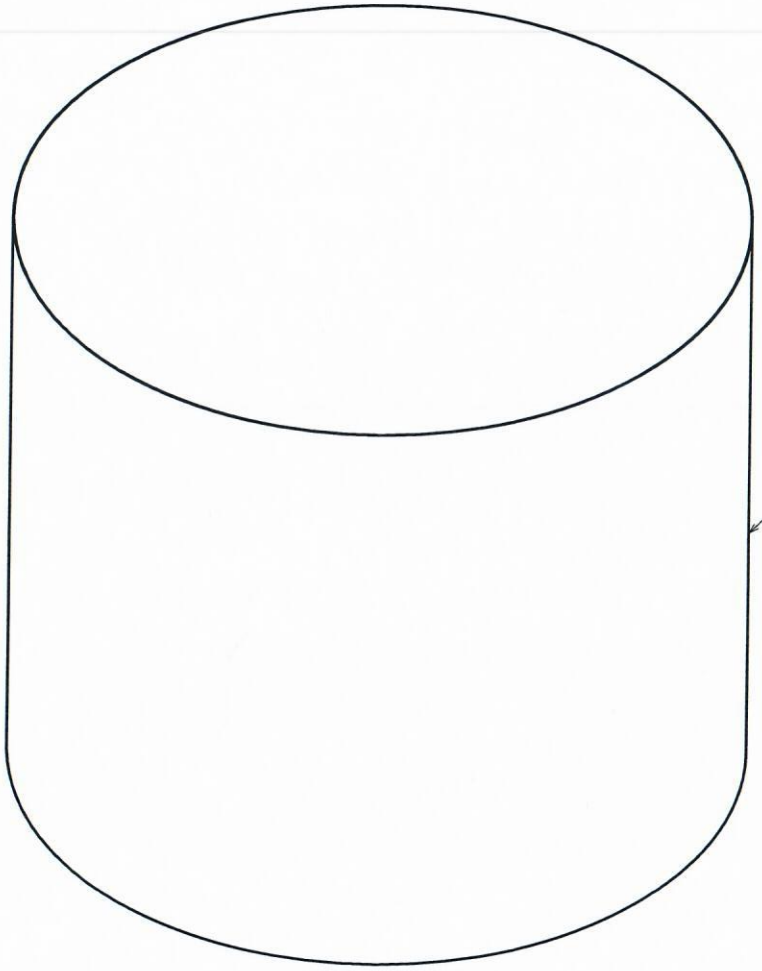

KAPTON SHEET LENGTH 460 X WIDTH 122 X 0.125 THICKNESS

FREE ISSUE MATERIAL

QTY: 01

Isometric view
Scale: 1:1

DRW DOC ID			RELEASED BY
LINKED EV5 PT ID			APPROVED BY: P AJESH
PBS TITLE			CHECKED BY
REV DATE: 01/08/19	PT MATURITY	PT VERSION	CONTROLLED BY
SHEET SIZE: -	SCALE: NTS	PT Status	DRAWN BY: P AJESH
THIRD ANGLE PROJECTION	NO.OF SHTS: 01		PBS 3 LEVELS

ITER INDIA (IPR) GANDHINAGAR

CONFIDENTIAL UNLESS AUTHORISED

The information on this drawing is confidential under the terms of the ITER India agreement.This information shall not be transmitted to anyone who is not authorised to receive it.

ITER-India

DRAWING TITLE

KAPTON

CG CAPACITOR - HPA-2

DRAWING NUMBER	SHEET	REVISION	DR STATU
II/ICH/HPA-2/CG/02	01		

vation for the banner

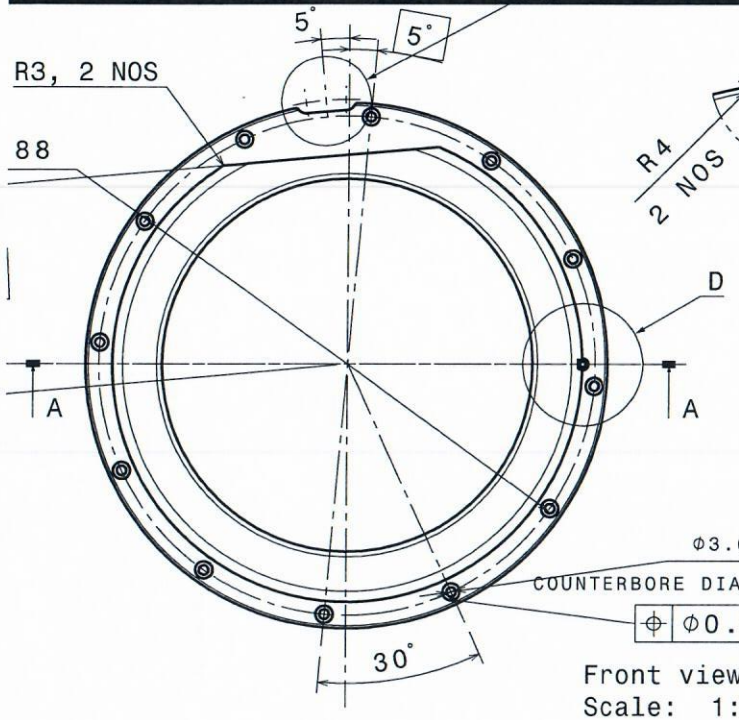

Front view
Scale: 1:2

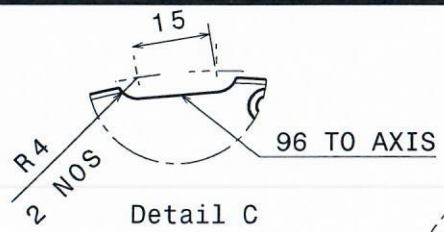

Detail C
Scale: 1:1

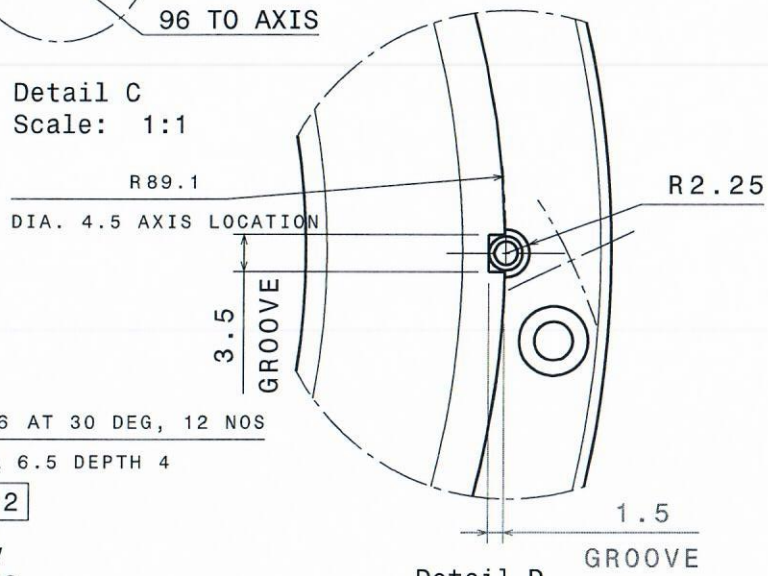

Detail D
Scale: 2:1

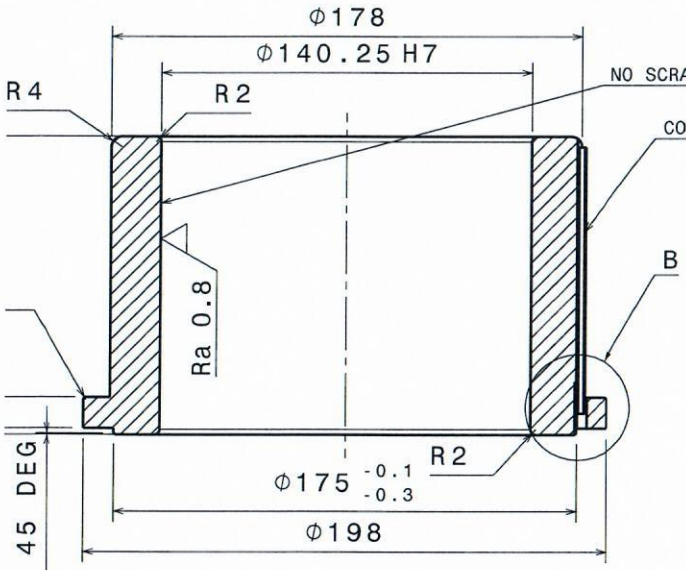

Section view A-A
Scale: 1:2

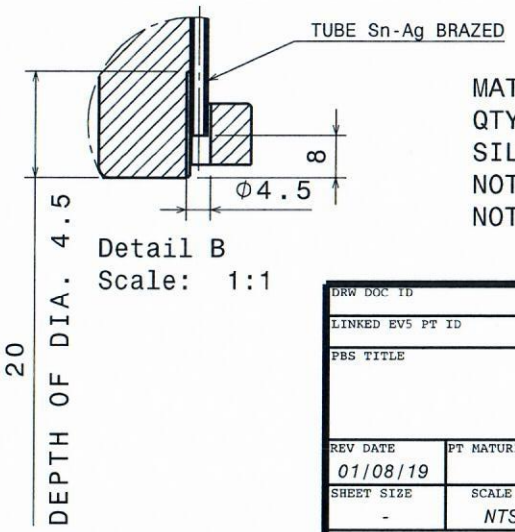

Detail B
Scale: 1:1

MATERIAL: Cu Sn 12 P (EXCEPT TUBE)
QTY: 01
SILVER PLATING/ COATING Ag15+Cu 3 MICRON FULL BODY
NOTE 1 : MASK THE THREADINGS DURING THE SILVERING
NOTE22: OUTER CONDUCTOR SHOULD BE MADE FROM SOLID ROD
OR SEAMLESS HOLLOW PIPE

DRW DOC ID		RELEASED BY	ITER INDIA (IPR) GANDHINAGAR
LINKED EV5 PT ID		APPROVED BY: P AJESH	CONFIDENTIAL UNLESS AUTHORISED — The information on this drawing is confidential under the terms of the ITER India agreement. This information shall not be transmitted to anyone who is not authorised to receive it.
PBS TITLE		CHECKED BY	ITER-India
REV DATE: 01/08/19	PT MATURITY / PT VERSION	CONTROLLED BY	DRAWING TITLE: OUTER CONDUCTOR
SHEET SIZE: -	SCALE: NTS / PT Status	DRAWN BY: P AJESH	CG CAPACITOR - HPA-2
THIRD ANGLE PROJECTION	NO.OF SHTS: 01	PBS 3 LEVELS	DRAWING NUMBER: II/ICH/HPA-2/CG/03 — SHEET 01 — REVISION OR STATU

·vation for the banner

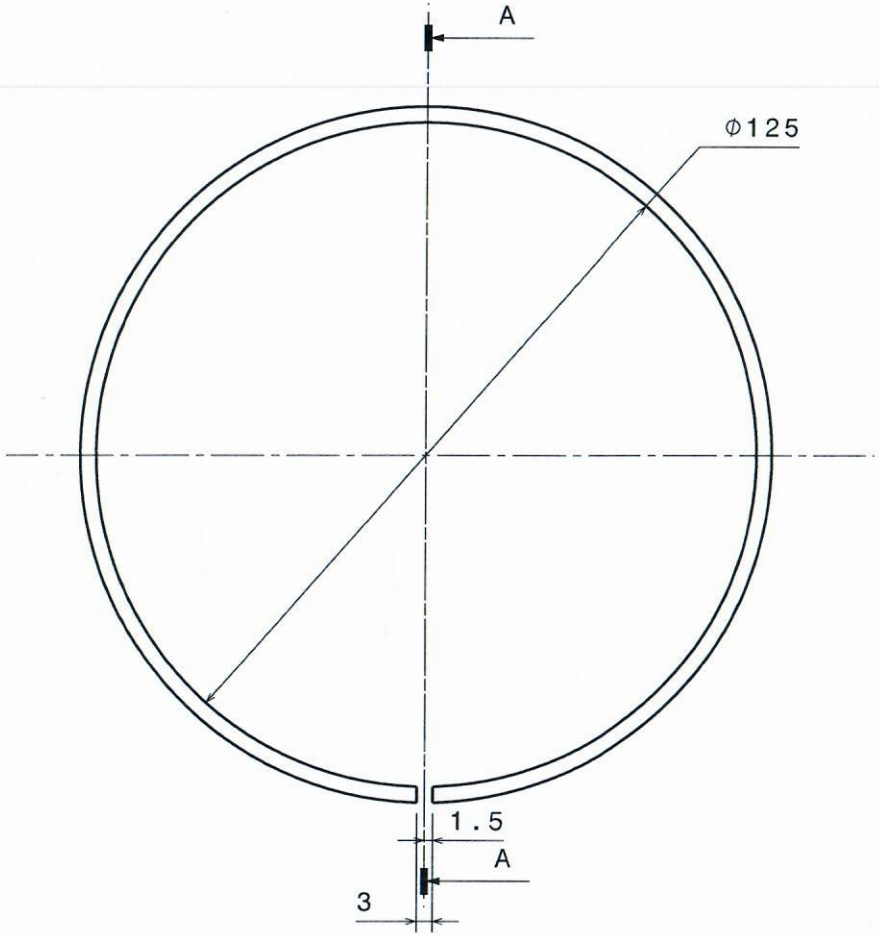

Front view
Scale: 1:1

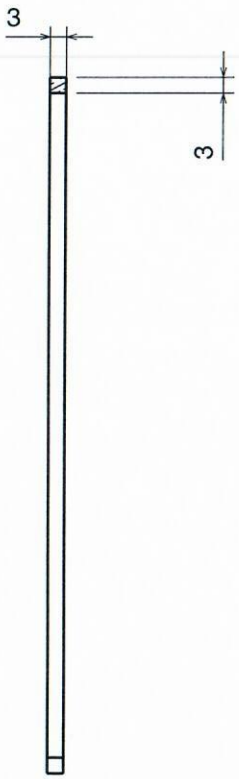

Section view A-A
Scale: 1:1

MATERIAL: Cu Zn 39 Pb 2
QTY: 01

DRW DOC ID			RELEASED BY
LINKED EV5 PT ID			APPROVED BY: P AJESH
PBS TITLE			CHECKED BY
REV DATE: 01/08/19	PT MATURITY	PT VERSION	CONTROLLED BY
SHEET SIZE: -	SCALE: NTS	PT Status	DRAWN BY: P AJESH
THIRD ANGLE PROJECTION		NO.OF SHTS: 01	PBS 3 LEVELS

ITER INDIA (IPR) GANDHINAGAR

CONFIDENTIAL UNLESS AUTHORISED

The information on this drawing is confidential under the terms of the ITER India agreement.This information shall not be transmitted to anyone who is not authorised to receive it.

ITER-India

DRAWING TITLE

RING

CG CAPACITOR - HPA-2

DRAWING NUMBER	SHEET	REVISION OR STATU
II/ICH/HPA-2/CG/04	01	

vation for the banner

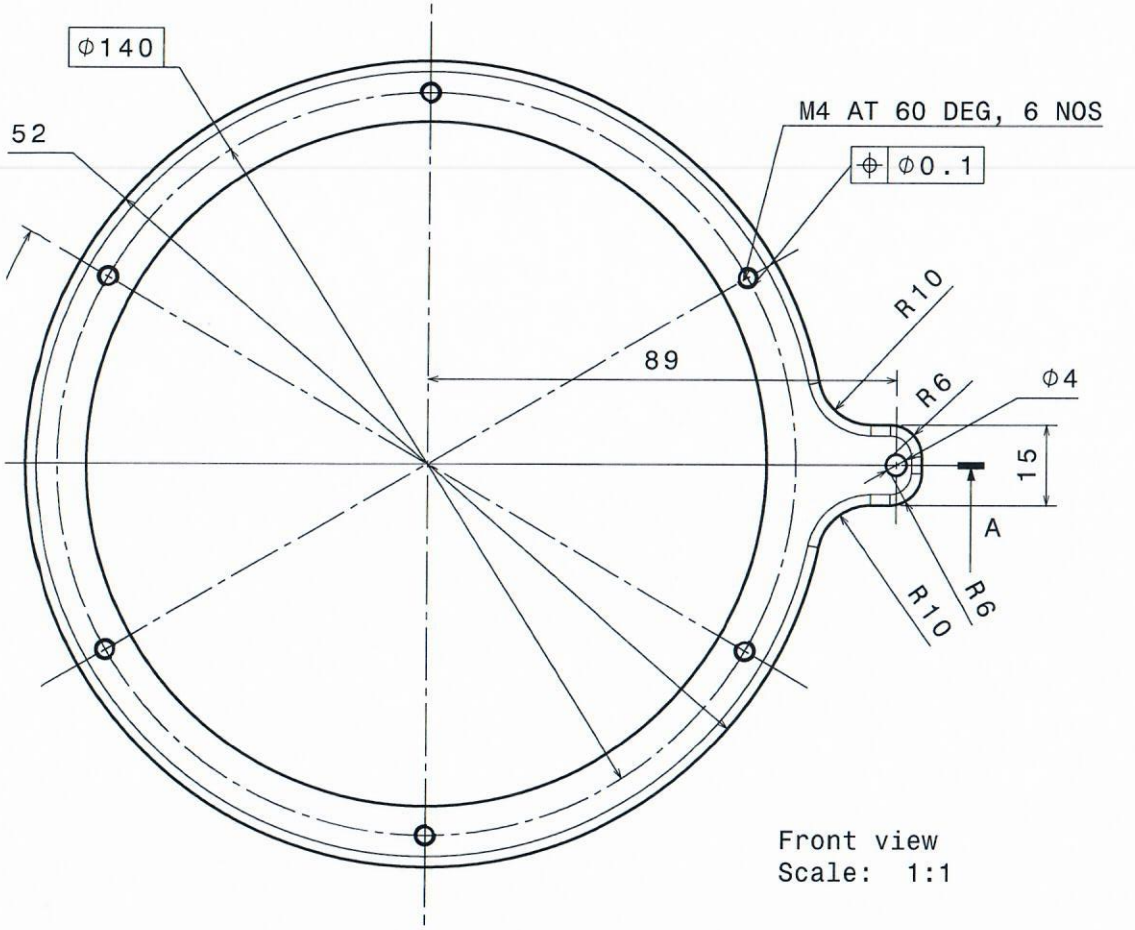

Front view
Scale: 1:1

MATERIAL: Cu Zn 39 Pb 2
QTY: 01
SILVER PLATING/ COATING Ag15+Cu 3 MICRON FULL BODY
NOTE: MASK THE THREADINGS DURING THE SILVERING

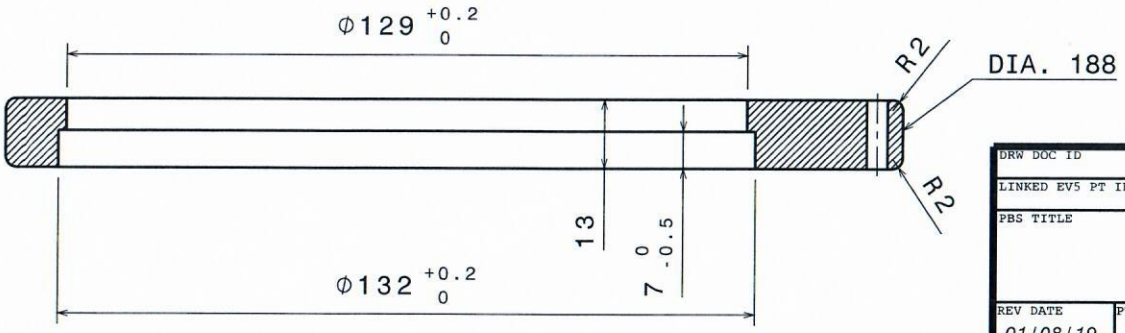

Section view A-A
Scale: 1:1

DRW DOC ID		RELEASED BY	ITER INDIA (IPR) GANDHINAGAR
LINKED EV5 PT ID		APPROVED BY: P AJESH	CONFIDENTIAL UNLESS AUTHORISED — The information on this drawing is confidential under the terms of the ITER India agreement.This information shall not be transmitted to anyone who is not authorised to receive it.
PBS TITLE		CHECKED BY	DRAWING TITLE: FLANGE
REV DATE: 01/08/19	PT MATURITY / PT VERSION	CONTROLLED BY	CG CAPACITOR - HPA-2
SHEET SIZE: -	SCALE: NTS / PT Status	DRAWN BY: P AJESH	
THIRD ANGLE PROJECTION	NO.OF SHTS: 01	PBS 3 LEVELS	DRAWING NUMBER: II/ICH/HPA-2/CG/05 — SHEET: 01 — REVISION — DR STATU

ITER-India

·vation for the banner

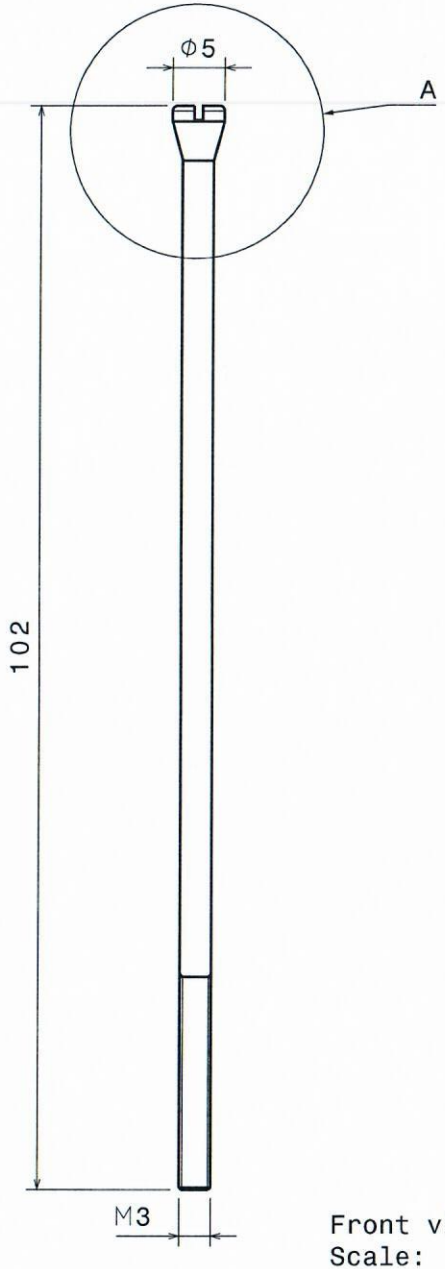

Front view
Scale: 2:1

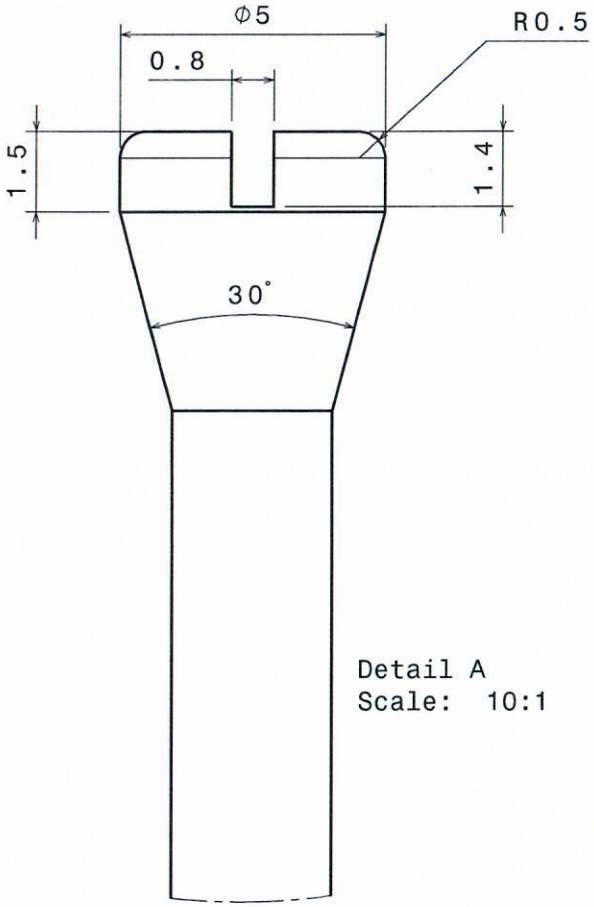

Detail A
Scale: 10:1

MATERIAL: Z2 CN 18/10 (SS 316L)
QTY: 04

DRW DOC ID		RELEASED BY	ITER INDIA (IPR) GANDHINAGAR
LINKED EV5 PT ID		APPROVED BY: P AJESH	CONFIDENTIAL UNLESS AUTHORISED
PBS TITLE		CHECKED BY	The information on this drawing is confidential under the terms of the ITER India agreement.This information shall not be transmitted to anyone who is not authorised to receive it.
REV DATE: 01/08/19	PT MATURITY / PT VERSION	CONTROLLED BY	DRAWING TITLE: SCREW
SHEET SIZE: -	SCALE: NTS / PT Status	DRAWN BY: P AJESH	CG CAPACITOR - HPA-2
THIRD ANGLE PROJECTION	NO.OF SHTS: 01	PBS 3 LEVELS	DRAWING NUMBER: II/ICH/HPA-2/CG/06 · SHEET: 01 · REVISION · STATUS

ITER-India

vation for the banner

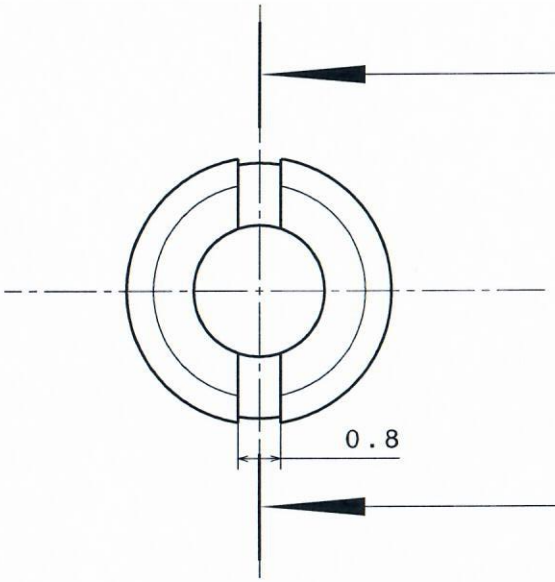

Front view
Scale: 10:1

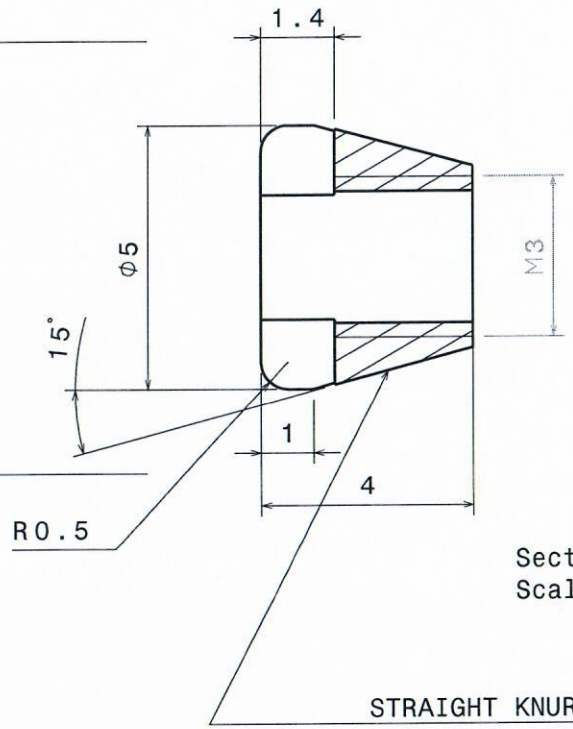

Section view A-A
Scale: 10:1

MATERIAL: Z2 CN 18/10 (SS 316L)
QTY: 04

DRW DOC ID			RELEASED BY
LINKED EV5 PT ID			APPROVED BY: P AJESH
PBS TITLE			CHECKED BY
REV DATE: 01/08/19	PT MATURITY	PT VERSION	CONTROLLED BY
SHEET SIZE: -	SCALE: NTS	PT Status	DRAWN BY: P AJESH
THIRD ANGLE PROJECTION		NO.OF SHTS: 01	PBS 3 LEVELS

ITER INDIA (IPR) GANDHINAGAR

CONFIDENTIAL UNLESS AUTHORISED

The information on this drawing is confidential under the terms of the ITER India agreement.This information shall not be transmitted to anyone who is not authorised to receive it.

ITER-India

DRAWING TITLE

NUT

CG CAPACITOR - HPA-2

DRAWING NUMBER	SHEET	REVISION OR STATU
II/ICH/HPA-2/CG/07	01	

'vation for the banner

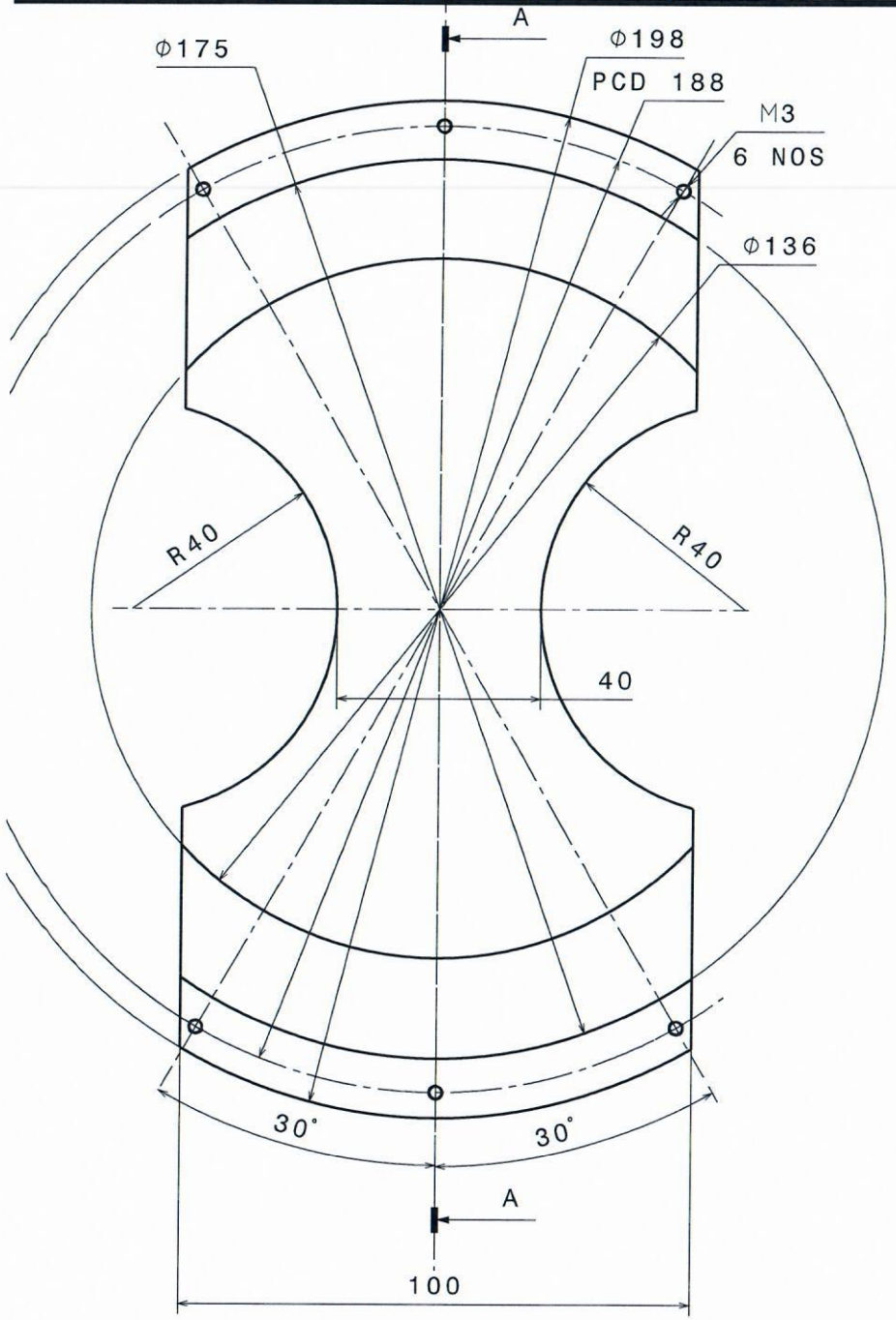

Front view
Scale: 1:1

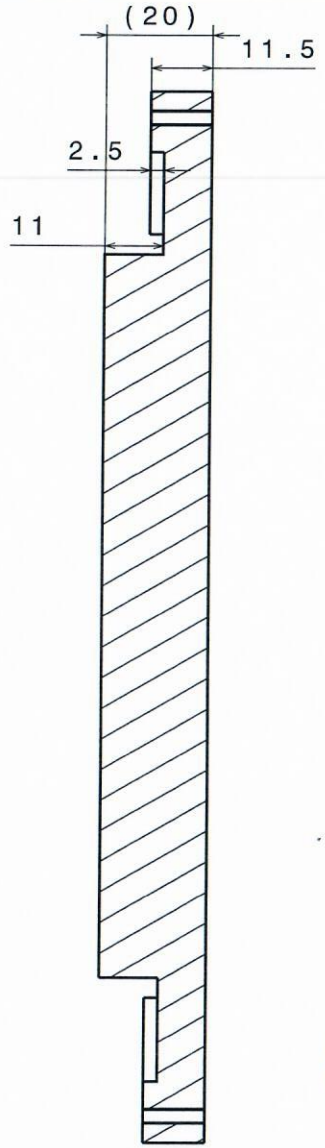

Section view A-A
Scale: 1:1

MATERIAL: Z2 CN 18/10 (SS 304L)
QTY: 01

DRW DOC ID		RELEASED BY	ITER INDIA (IPR) GANDHINAGAR
LINKED EV5 PT ID		APPROVED BY: P AJESH	CONFIDENTIAL UNLESS AUTHORISED
PBS TITLE		CHECKED BY	The information on this drawing is confidential under the terms of the ITER India agreement. This information shall not be transmitted to anyone who is not authorised to receive it.
REV DATE: 01/08/19	PT MATURITY / PT VERSION	CONTROLLED BY	DRAWING TITLE: BASE
SHEET SIZE: -	SCALE: NTS / PT Status	DRAWN BY: P AJESH	CG CAPACITOR - HPA-2
THIRD ANGLE PROJECTION	NO.OF SHTS: 01	PBS 3 LEVELS	DRAWING NUMBER: II/ICH/HPA-2/CG/08 · SHEET: 01 · REVISION · DR STATU

ITER-India

·vation for the banner

Annexure – II

Engineering drawings

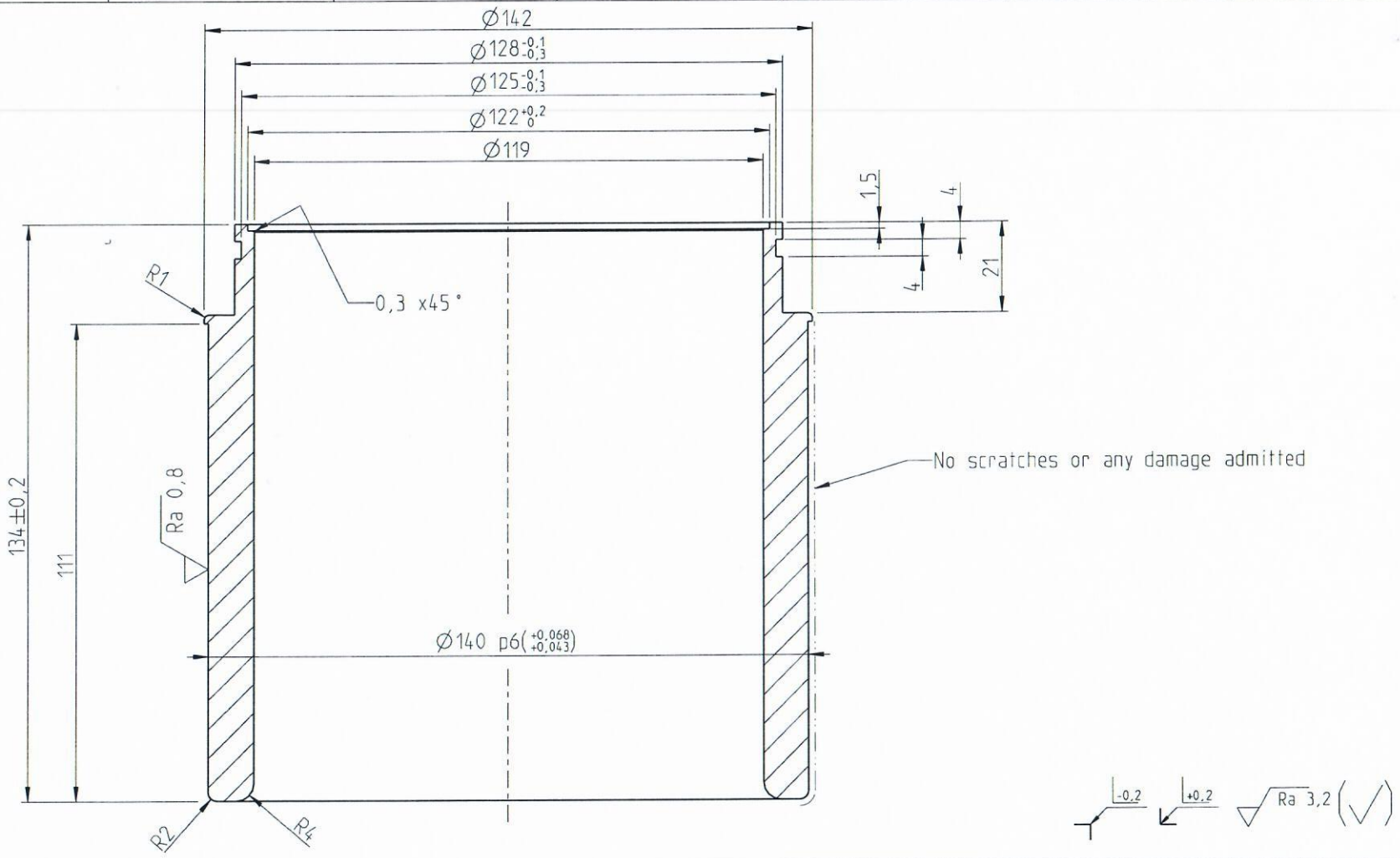

NOTE:INNER CONDUCTOR SHOULD BE MADE FROM SOLID ROD OR SEAMLESS HOLLOW PIPE

REV	CHANGE No	DESCRIPTION	DRAWN	DATE	CHECKED

MATERIAL : Cu Sn 12 P

TREATMENT:

FINISH : Silvering Ag 15+Cu 3(I)

ISO 2768: m-K
ISO 1302
ISO 13715
ISO 965-2

SCALE 1/1

DRAWN:	DATE: 07/09/12	CHECKED:	DATE: 07/09/12	APPROVED:	DATE: 07/09/12

TITLE : \

TITLE :

DOCUMENT NUMBER	SIZE	PAGE
II/ICH/HPA-2/CG/PF/01	A3	1/1

REV -

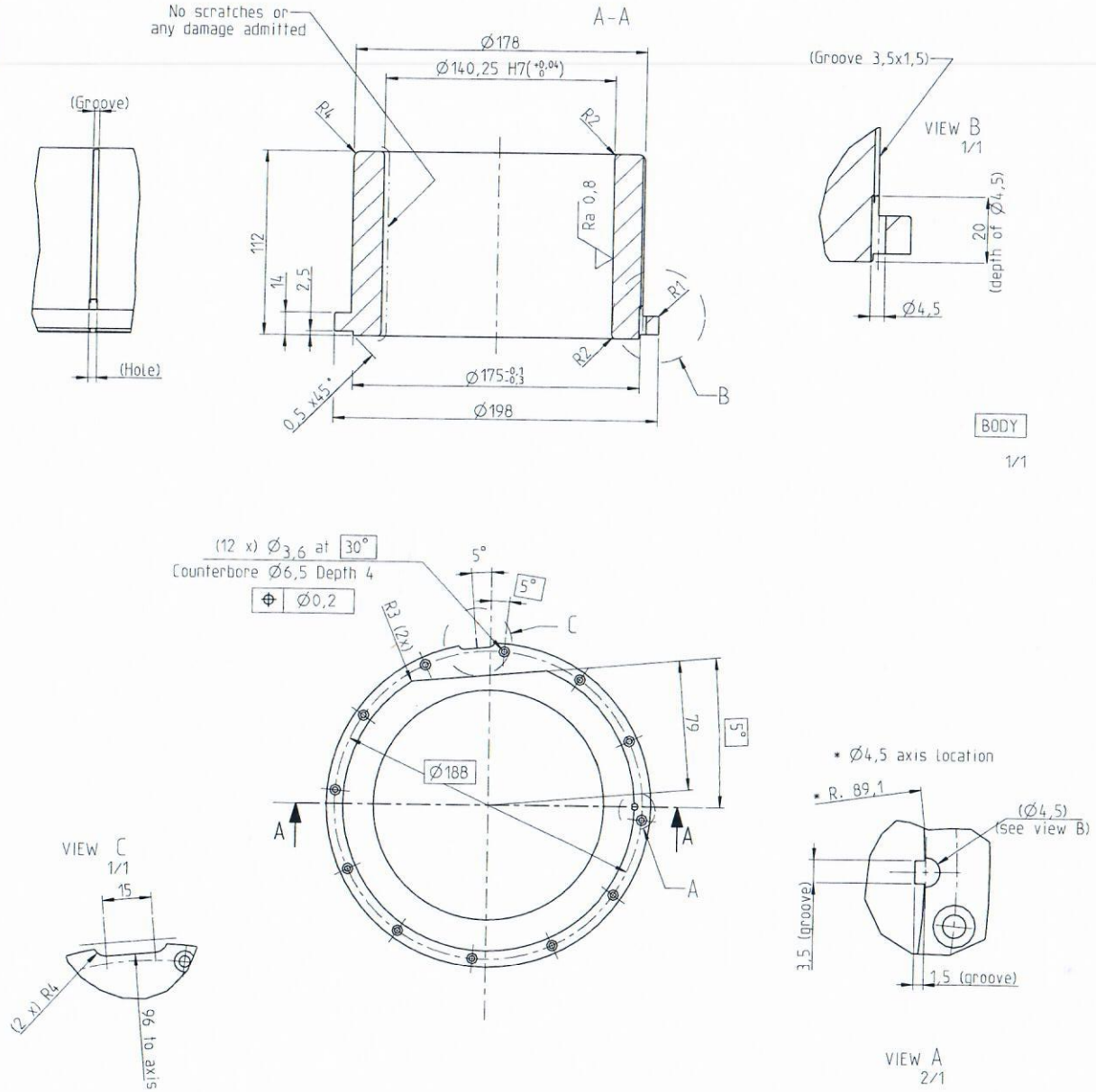

NOTE:INNER CONDUCTOR SHOULD BE MADE FROM SOLID ROD OR SEAMLESS HOLLOW PIPE

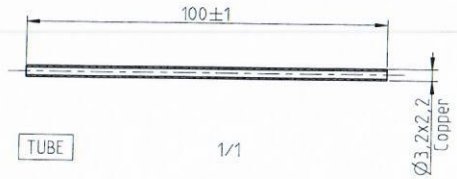

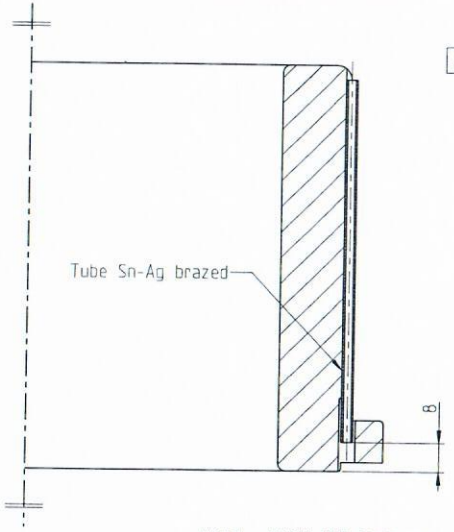

NOTA : MASK THE THREADINGS DURING THE SILVERING

Ra 1,6

REV	CHANGE No	DESCRIPTION	DRAWN	DATE	CHECKED
MATERIAL : Cu Sn 12 P (except tube)			ISO 2768: m-K ISO 1302 ISO 13715 ISO 965-2		SCALE 1/1
TREATMENT :					
FINISH : Silvering Ag 15+Cu 3(I)					
DRAWN	DATE 12/09/12	CHECKED:	DATE 12/09/12	APPROVED:	DATE: 12/09/12

TITLE :

TITLE :

DOCUMENT NUMBER	SIZE	PAGE
II/ICH/HPA-2/CG/PF/02	A2	1/2

REV

DOCUMENT NUMBER	FORMAT/SIZE	PAGE
	A2	1/2

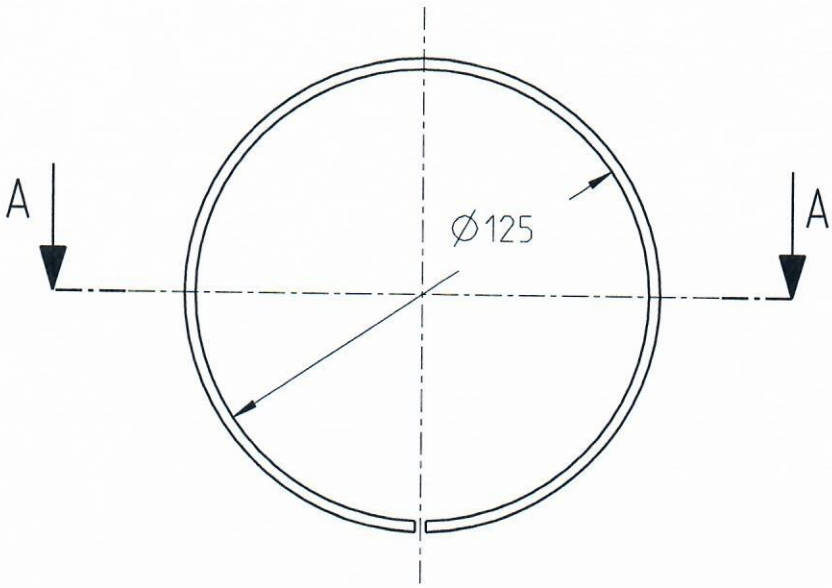

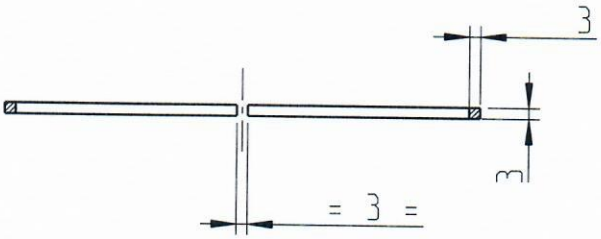

SECTION A-A

-0,2 +0,2 Ra 3,2

REV	CHANGE No	DESCRIPTION	DRAWN	DATE	CHECKED

MATERIAL : Cu Zn 39 Pb 2

TREATMENT:

FINISH :

ISO 2768: m-K
ISO 1302
ISO 13715
ISO 965-2

SCALE 1/2

DRAWN:	DATE: 07/09/12	CHECKED:	DATE: 07/09/12	APPROVED:	DATE: 07/09/12

TITLE :

TITLE :

DOCUMENT NUMBER	SIZE	PAGE
II/ICH/HPA-2/CG/PF/03	A4	1/1
		- REV

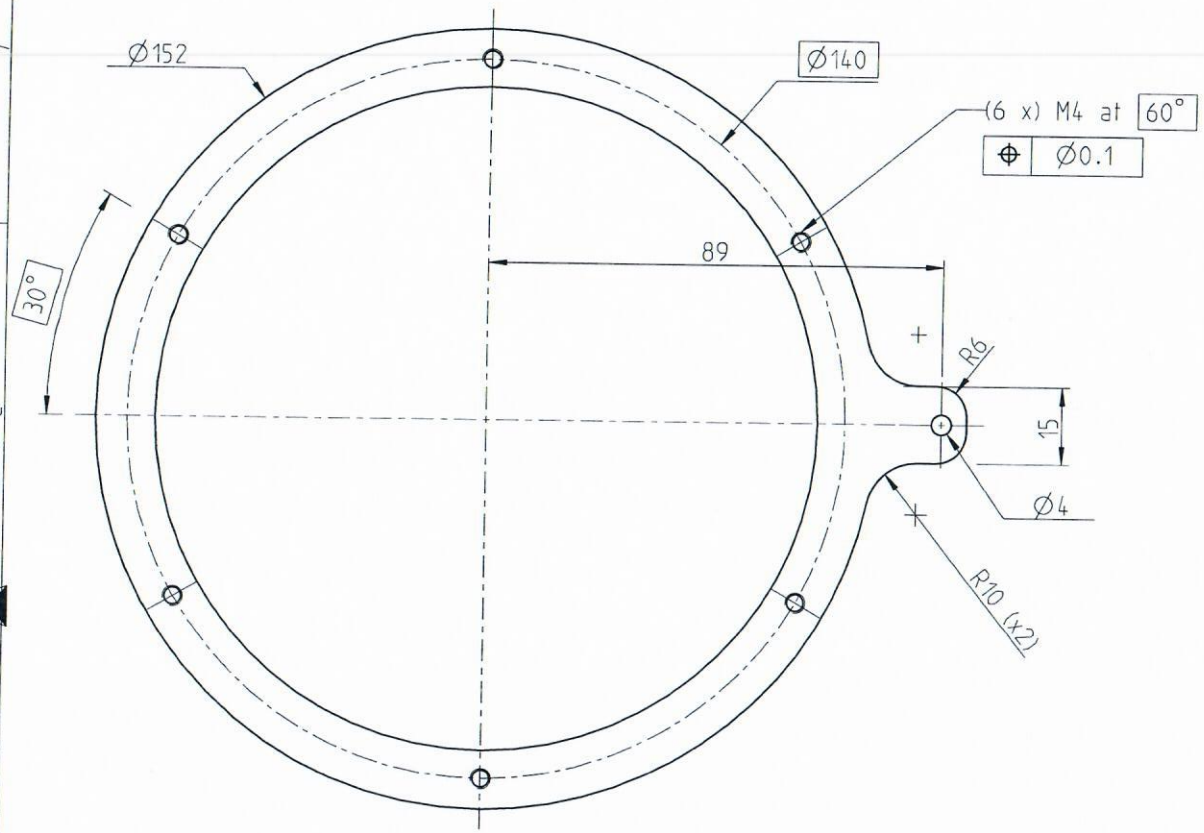

NOTA : MASK THE THREADINGS DURING THE SILVERING

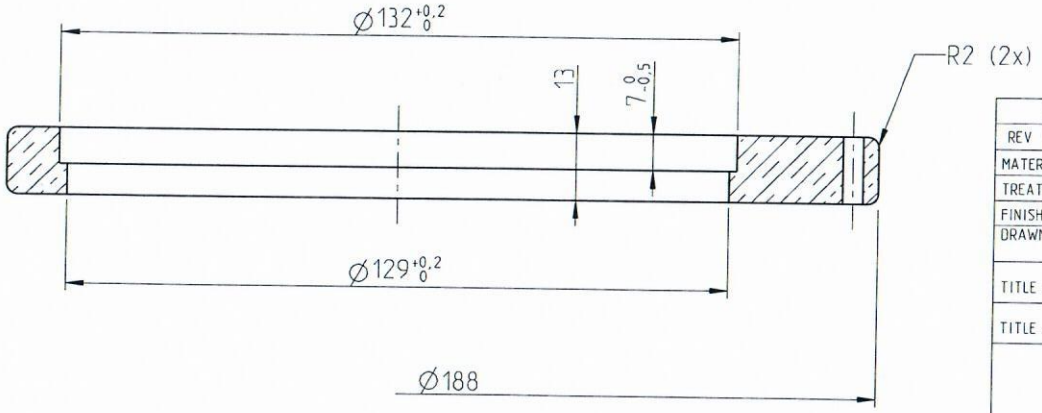

-0,2 +0,2 Ra 3,2

REV	CHANGE No	DESCRIPTION	DRAWN	DATE	CHECKED

MATERIAL : Cu Zn 39 Pb 2

TREATMENT:

FINISH : Silvering Ag 15+Cu 3(I)

ISO 2768: m-K
ISO 1302
ISO 13715
ISO 965-2

SCALE 1/1

DRAWN: DATE: 07/09/12 CHECKED: DATE: 07/09/12 APPROVED: DATE: 07/09/12

TITLE :

TITLE :

DOCUMENT NUMBER	SIZE	PAGE
II/ICH/HPA-2/CG/PF/04	A3	1/1

REV -

Annexure – III

Engineering drawings

NOTE :SURFACE IRREGULARITIES,SCRATCHES,DENTS AND TOOL MARKS ARE NOT ALLOWED.

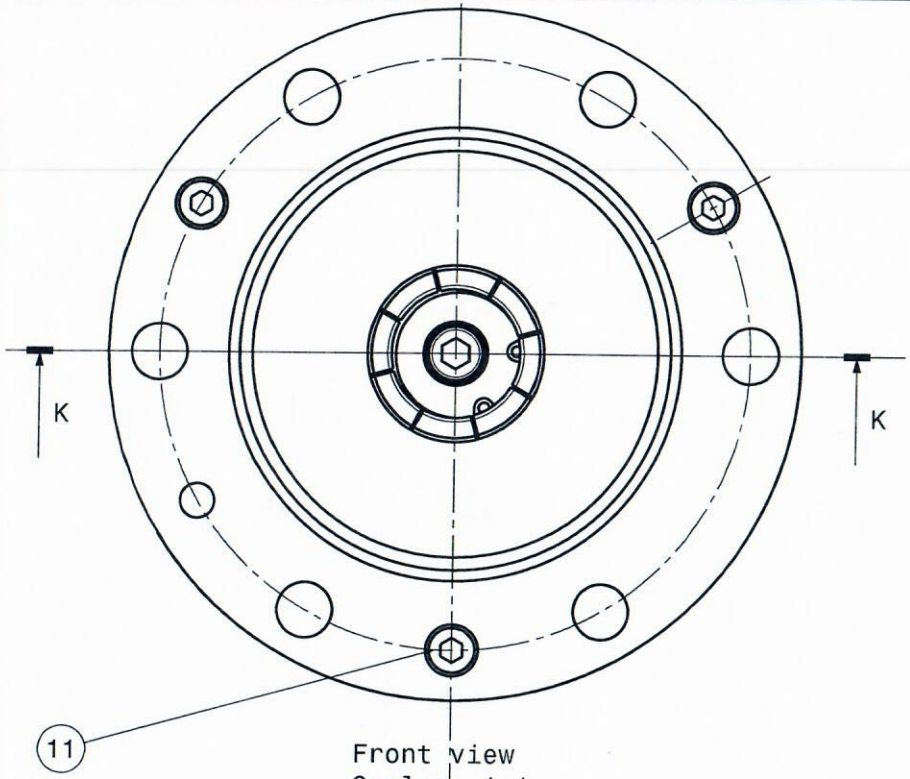

Front view
Scale: 1:1

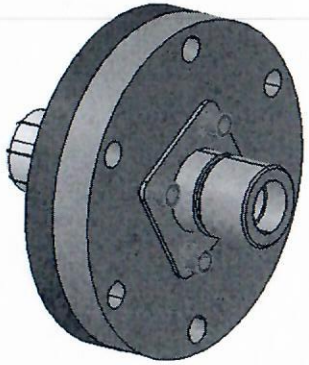

Isometric view
Scale: 1:2

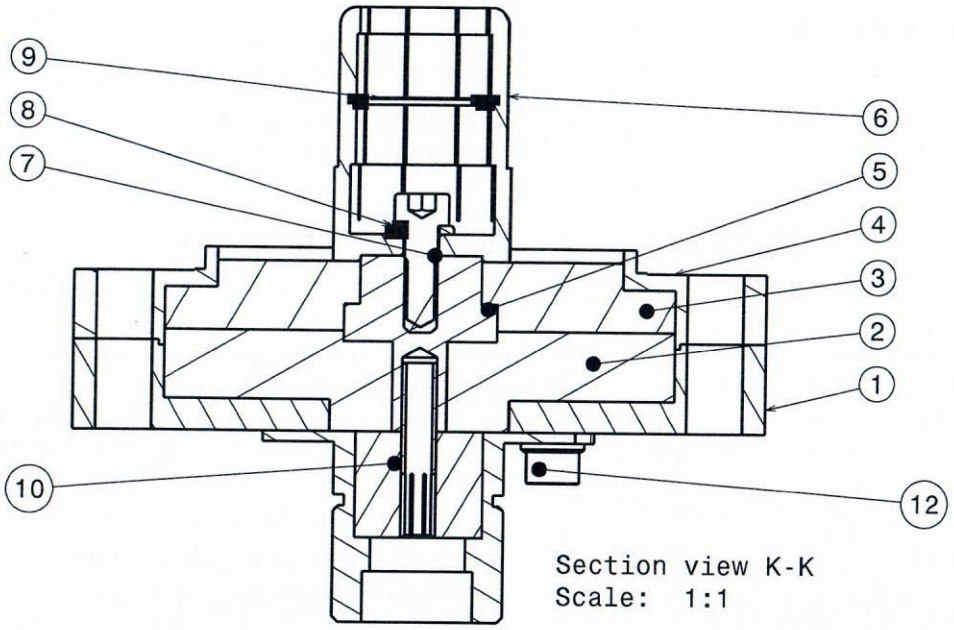

Section view K-K
Scale: 1:1

PART NO	PART NAME	DESCRIPTION / MATERIAL	QTY
12	SCREW M3 X 6L	SS 304	4
11	SCREW M5 X 16 L	SS 304	3
10	N TYPE CONNECTOR	SEE SHEET NO 09	1
9	INTERNAL CIRCLIP	SS 304	1
8	WASHER FOR M6	SS 304	1
7	SCREW M6 X 16L	SS 304	1
6	IC FEMALE	BRASS (60:40)	1
5	IC	BRASS (60:40)	1
4	3-1/8" FIX FLANGE PART-I	ALUMINIUM 6061 T6	1
3	TEFLON 1	TEFLON	1
2	TEFLON 2	TEFLON	1
1	3-1/8" FIX FLANGE PART-II	ALUMINIUM 6061 T6	1

DRW DOC ID		RELEASED BY	ITER INDIA (IPR) GANDHINAGAR
LINKED EV5 PT ID		APPROVED BY P.AJESH	CONFIDENTIAL UNLESS AUTHORISED
PBS TITLE		CHECKED BY MANOJ	The information on this drawing is confidential under the terms of the ITER India agreement.This information shall not be transmitted to anyone who is not authorised to receive it.
REV DATE	PT MATURITY / PT VERSION	CONTROLLED BY	DRAWING TITLE: 3 TO LC TYPE REDUCER ASSEMBLY
SHEET SIZE 420x297	SCALE 1:1 / PT Status	DRAWN BY P AJESH	
THIRD ANGLE PROJECTION	NO.OF SHTS 09	PBS 3 LEVELS	DRAWING NUMBER II/ICH/REDUCER/3-LC/00 / SHEET 01 / REVISION OR STATU

ITER-India

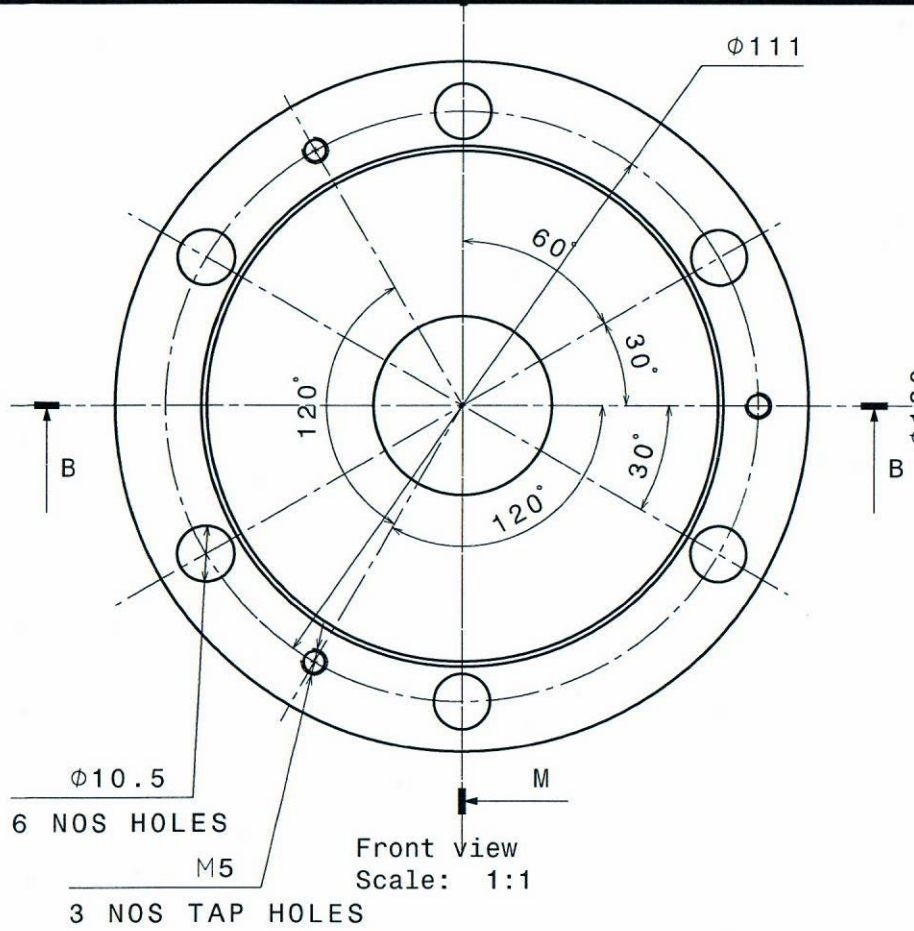

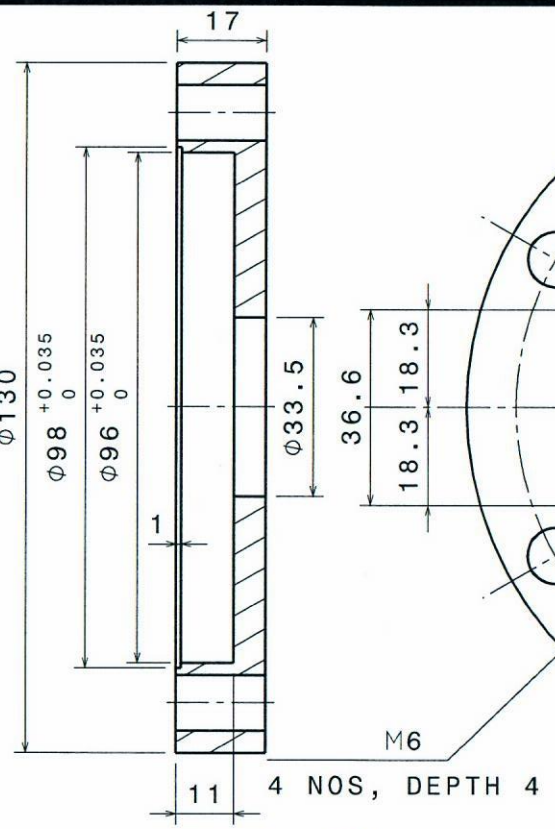

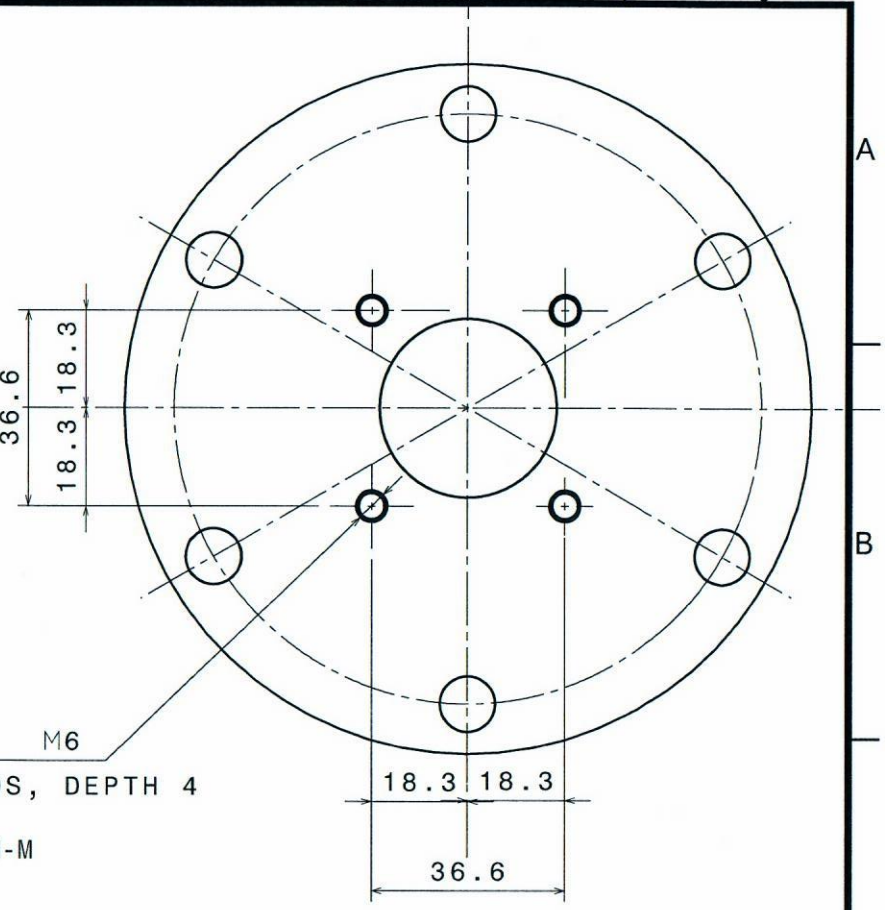

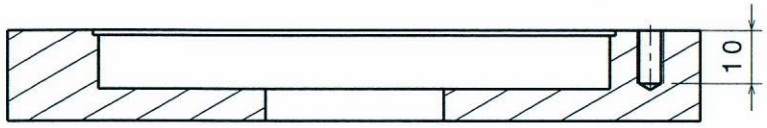

Section view B-B
Scale: 1:1

MATERIAL: ALUMINIUM 6061-T6
QTY: 1 NO

NOTE: SURFACE IRREGULARITIES, SCRATCHES, DENTS AND TOOL MARKS ARE NOT ALLOWED.

DRW DOC ID		RELEASED BY	ITER INDIA (IPR) GANDHINAGAR
LINKED EV5 PT ID		APPROVED BY P.AJESH	CONFIDENTIAL UNLESS AUTHORISED
PBS TITLE		CHECKED BY MANOJ	The information on this drawing is confidential under the terms of the ITER India agreement. This information shall not be transmitted to anyone who is not authorised to receive it.
REV DATE / PT MATURITY / PT VERSION		CONTROLLED BY	DRAWING TITLE: 3-1/8" FIX FLANGE PART-II 3 TO LC TYPE REDUCER ASSEMBLY
SHEET SIZE 420x297 / SCALE 1:2	PT Status	DRAWN BY P AJESH	
THIRD ANGLE PROJECTION	NO.OF SHTS 09	PBS 3 LEVELS	DRAWING NUMBER II/ICH/REDUCER/3-LC/00 · SHEET 02 · REVISION · DR STATU

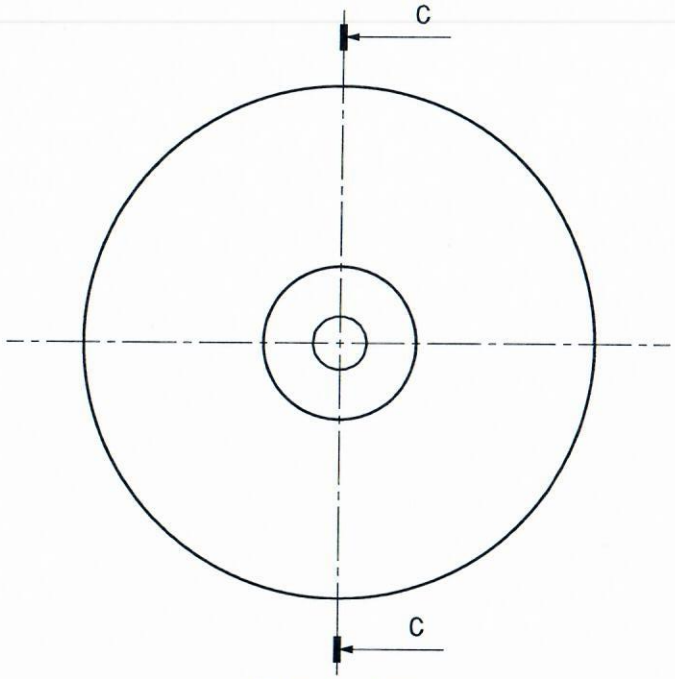

Front view
Scale: 1:1

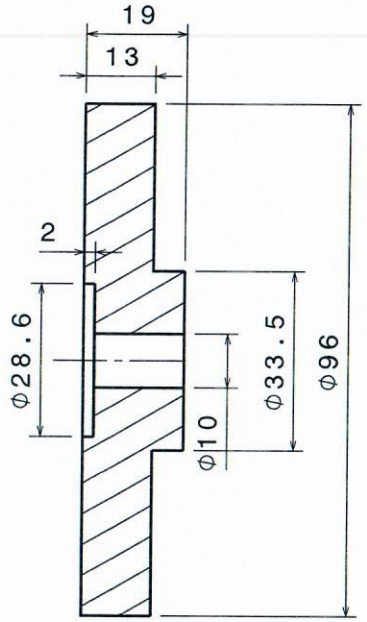

Section view C-C
Scale: 1:1

MATERIAL: TEFLON ROD PTFE ASTM D1710-8, 11B/ TEFLON PLATE PTFE ASTM D3294-03, 11A
QTY: 1 NO.

NOTE:SURFACE IRREGULARITIES,SCRATCHES,DENTS AND TOOL MARKS ARE NOT ALLOWED.

DRW DOC ID		RELEASED BY	ITER INDIA (IPR) GANDHINAGAR
LINKED EV5 PT ID		APPROVED BY P.AJESH	CONFIDENTIAL UNLESS AUTHORISED — The information on this drawing is confidential under the terms of the ITER India agreement.This information shall not be transmitted to anyone who is not authorised to receive it.
PBS TITLE		CHECKED BY MANOJ	DRAWING TITLE: TEFLON-2 3 TO LC TYPE REDUCER ASSEMBLY
REV DATE / PT MATURITY / PT VERSION		CONTROLLED BY	
SHEET SIZE 420x297 / SCALE 1:2 / PT Status		DRAWN BY P AJESH	
THIRD ANGLE PROJECTION / NO.OF SHTS 09		PBS 3 LEVELS	DRAWING NUMBER II/ICH/REDUCER/3-LC/00 / SHEET 03 / REVISION / DR STATU

ITER-India

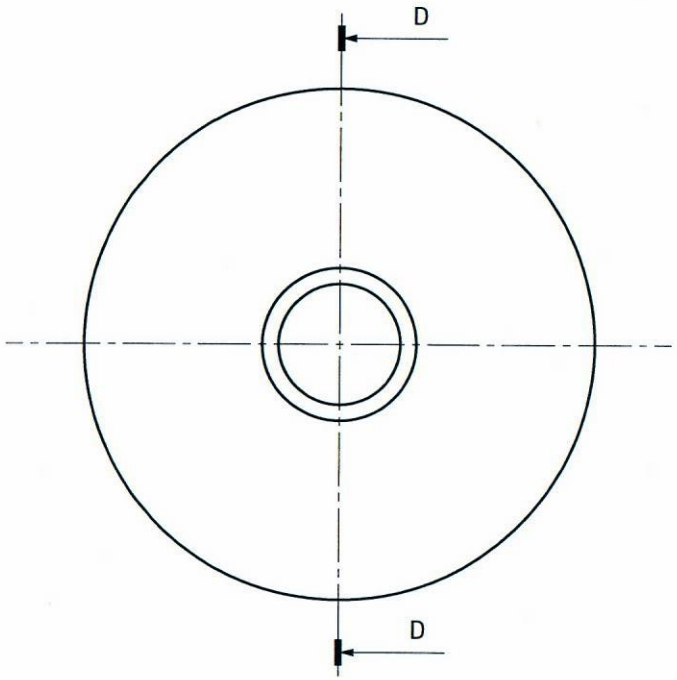

Front view
Scale: 1:1

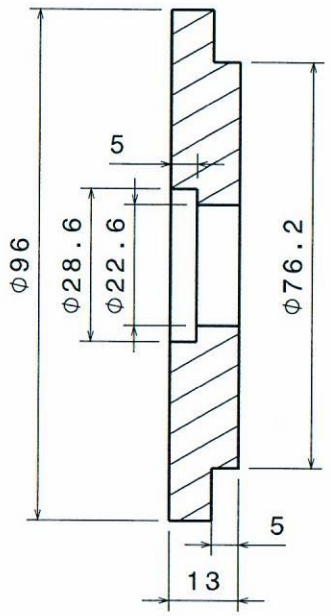

Section view D-D
Scale: 1:1

MATERIAL: TEFLON ROD PTFE ASTM D1710-8, 11B/ TEFLON PLATE PTFE ASTM D3294-03, 11A
QTY: 01 NO

NOTE: SURFACE IRREGULARITIES, SCRATCHES, DENTS AND TOOL MARKS ARE NOT ALLOWED.

DRW DOC ID		RELEASED BY	ITER INDIA (IPR) GANDHINAGAR
LINKED EV5 PT ID		APPROVED BY: P.AJESH	CONFIDENTIAL UNLESS AUTHORISED — The information on this drawing is confidential under the terms of the ITER India agreement. This information shall not be transmitted to anyone who is not authorised to receive it.
PBS TITLE		CHECKED BY: MANOJ	DRAWING TITLE: TEFLON-1 3 TO LC TYPE REDUCER ASSEMBLY
REV DATE	PT MATURITY / PT VERSION	CONTROLLED BY	
SHEET SIZE: 420x297	SCALE: 1:2 / PT Status	DRAWN BY: P AJESH	
THIRD ANGLE PROJECTION	NO.OF SHTS: 09	PBS 3 LEVELS	DRAWING NUMBER: II/ICH/REDUCER/3-LC/00 — SHEET: 04 — REVISION OR STATU

ITER-India

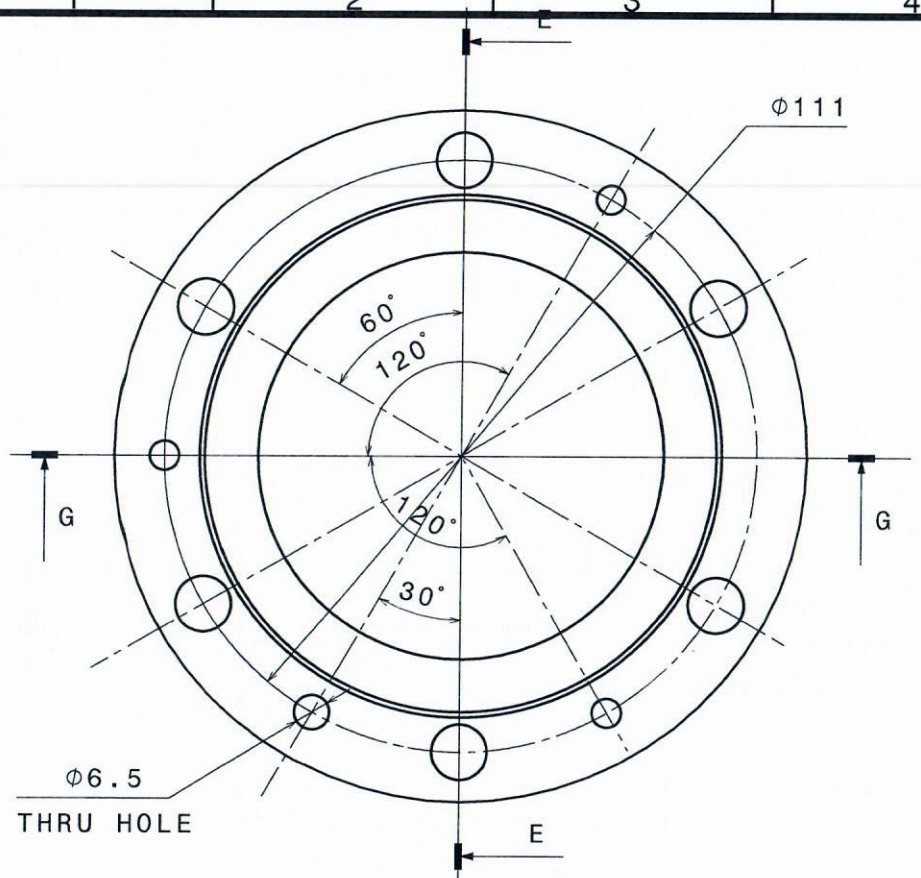

Front view
Scale: 1:1

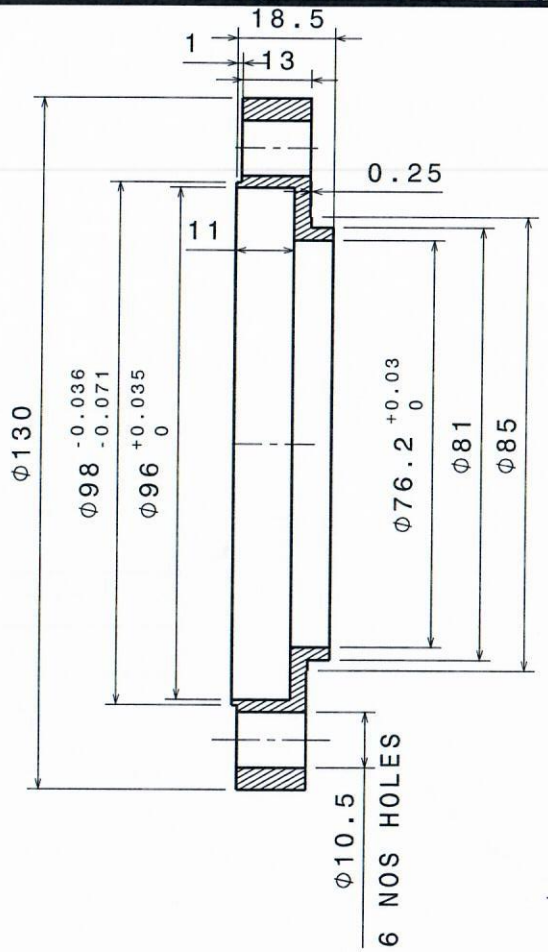

Section view E-E
Scale: 1:1

MATERIAL: ALUMINIUM 6061 T6
QTY: 01

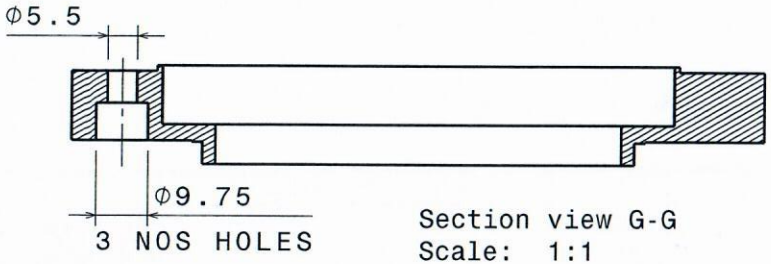

Section view G-G
Scale: 1:1

NOTE: SURFACE IRREGULARITIES, SCRATCHES, DENTS AND TOOL MARKS ARE NOT ALLOWED.

DRW DOC ID		RELEASED BY	ITER INDIA (IPR) GANDHINAGAR
LINKED EV5 PT ID		APPROVED BY P.AJESH	CONFIDENTIAL UNLESS AUTHORISED
PBS TITLE		CHECKED BY MANOJ	The information on this drawing is confidential under the terms of the ITER India agreement. This information shall not be transmitted to anyone who is not authorised to receive it.
REV DATE	PT MATURITY / PT VERSION	CONTROLLED BY	DRAWING TITLE: 3-1/8" FIX FLANGE PART-I 3 TO LC TYPE REDUCER ASSEMBLY
SHEET SIZE 420x297	SCALE 1:2 / PT Status	DRAWN BY P AJESH	
THIRD ANGLE PROJECTION	NO.OF SHTS 09	PBS 3 LEVELS	DRAWING NUMBER II/ICH/REDUCER/3-LC/00

SHEET 05 | REVISION | DR STATU

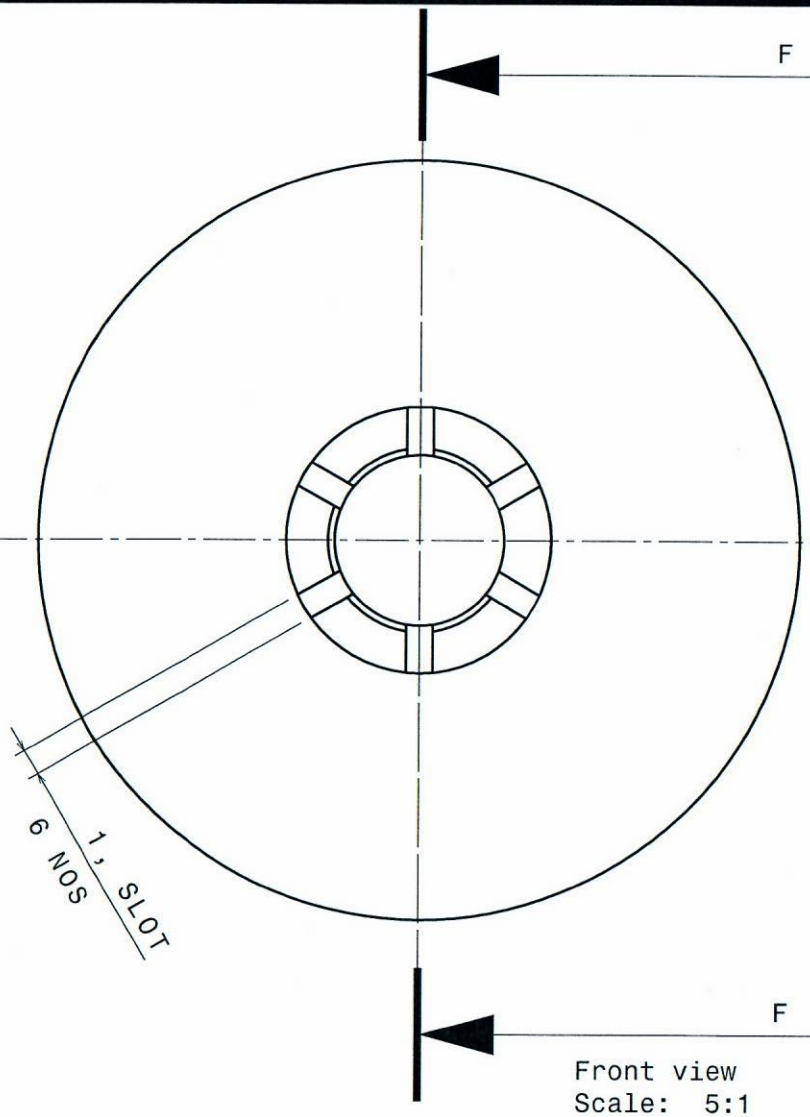

Front view
Scale: 5:1

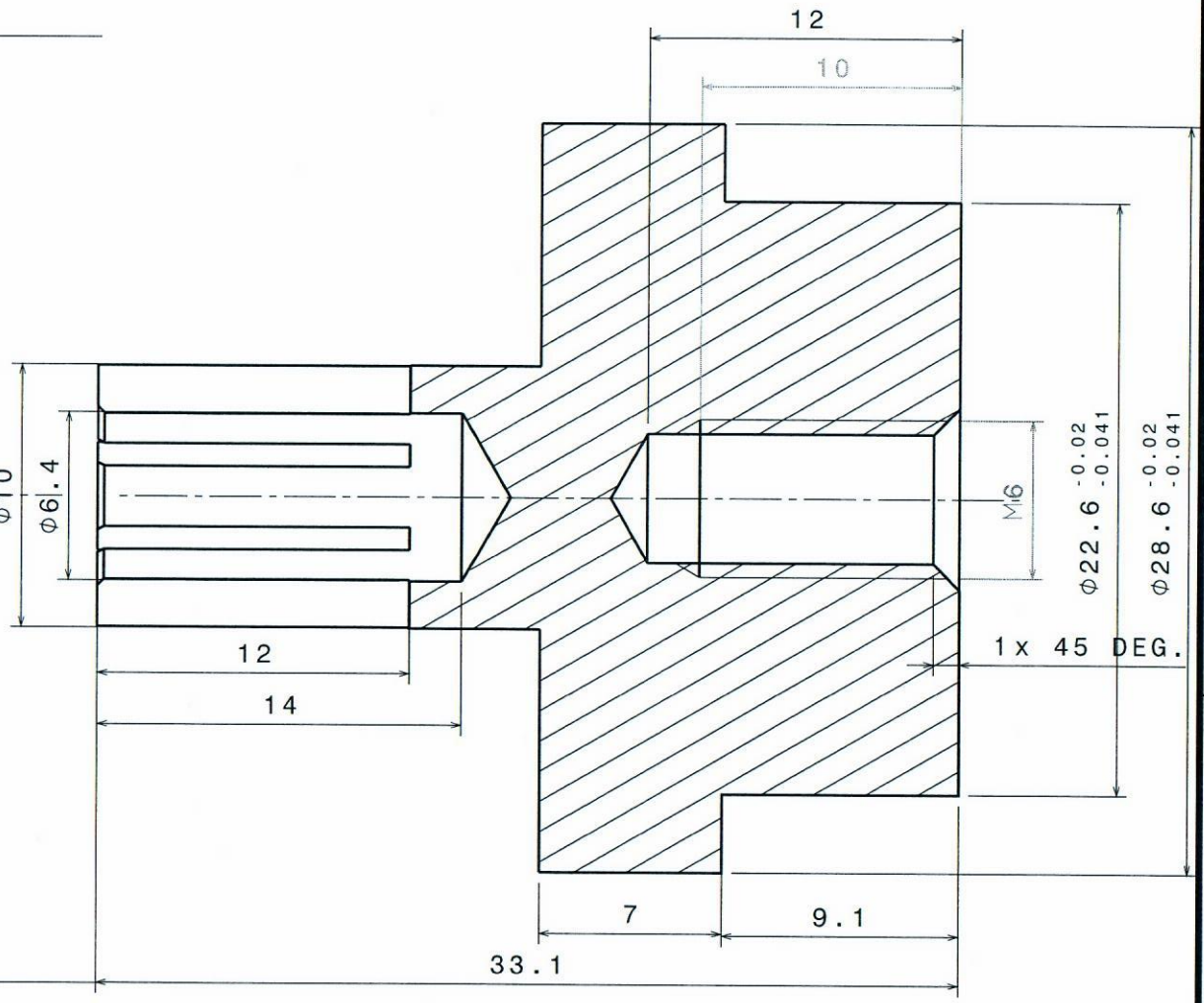

Section view F-F
Scale: 5:1

MATERIAL: BRASS 60:40
QTY: 01 NO
FULL BODY SLIVER PLATING OF 30 MICRON

NOTE:SURFACE IRREGULARITIES,SCRATCHES,DENTS AND TOOL MARKS ARE NOT ALLOWED.

DRW DOC ID		RELEASED BY	ITER INDIA (IPR) GANDHINAGAR
LINKED EV5 PT ID		APPROVED BY P.AJESH	CONFIDENTIAL UNLESS AUTHORISED — The information on this drawing is confidential under the terms of the ITER India agreement.This information shall not be transmitted to anyone who is not authorised to receive it.
PBS TITLE		CHECKED BY MANOJ	ITER-India
REV DATE / PT MATURITY / PT VERSION		CONTROLLED BY	DRAWING TITLE: IC 3 TO LC TYPE REDUCER ASSEMBLY
SHEET SIZE 420x297 / SCALE 1:2 / PT Status		DRAWN BY P AJESH	
THIRD ANGLE PROJECTION	NO.OF SHTS 09	PBS 3 LEVELS	DRAWING NUMBER II/ICH/REDUCER/3-LC/00 — SHEET 06 — REVISION OR STATU

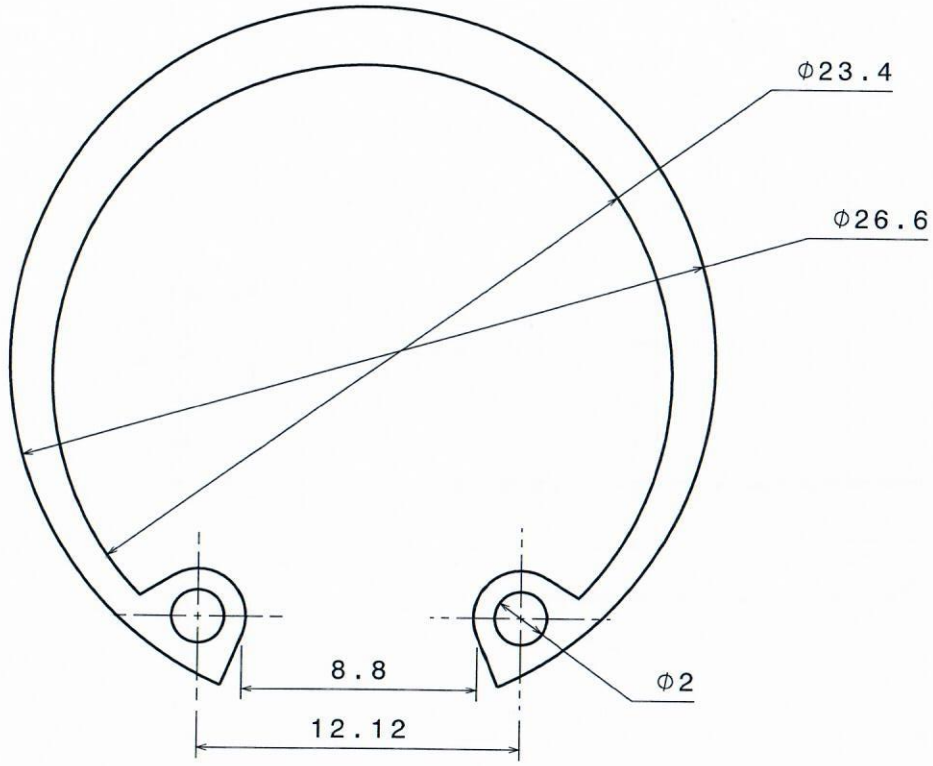

Front view
Scale: 5:1

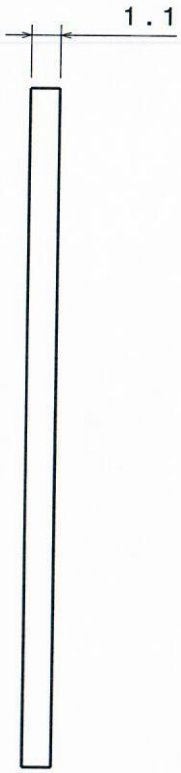

Right view
Scale: 5:1

MATERIAL: SS 304
QTY: 01 NOS

NOTE: SURFACE IRREGULARITIES, SCRATCHES, DENTS AND TOOL MARKS ARE NOT ALLOWED.

DRW DOC ID		RELEASED BY	ITER INDIA (IPR) GANDHINAGAR
LINKED EV5 PT ID		APPROVED BY: P.AJESH	CONFIDENTIAL UNLESS AUTHORISED
PBS TITLE		CHECKED BY: MANOJ	The information on this drawing is confidential under the terms of the ITER India agreement. This information shall not be transmitted to anyone who is not authorised to receive it.
REV DATE / PT MATURITY / PT VERSION		CONTROLLED BY	DRAWING TITLE: INTERNAL CIRCLIP 3 TO LC TYPE REDUCER ASSEMBLY
SHEET SIZE: 420x297 / SCALE: 1:2 / PT Status		DRAWN BY: P AJESH	
THIRD ANGLE PROJECTION	NO.OF SHTS: 09	PBS 3 LEVELS	DRAWING NUMBER: II/ICH/REDUCER/3-LC/00 / SHEET: 08 / REVISION / DR STATU

ITER-India

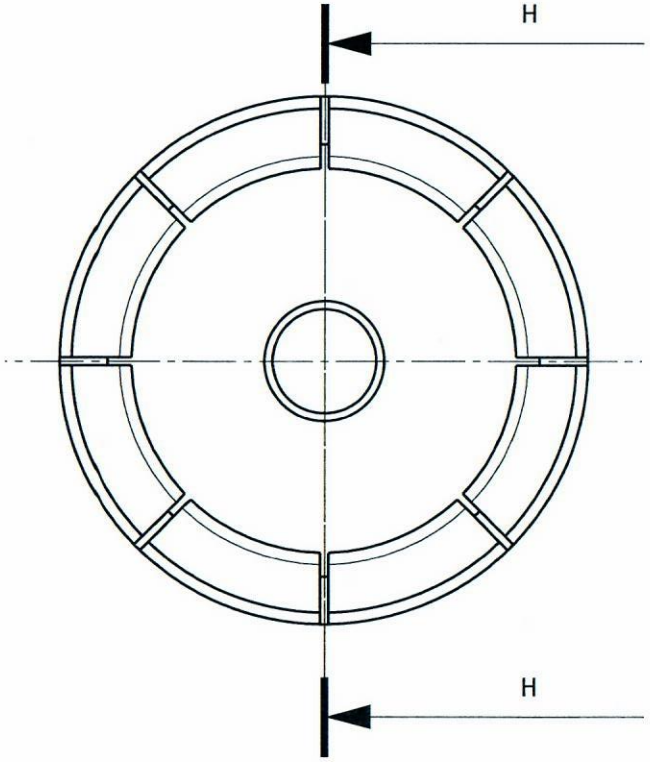

Front view
Scale: 3:1

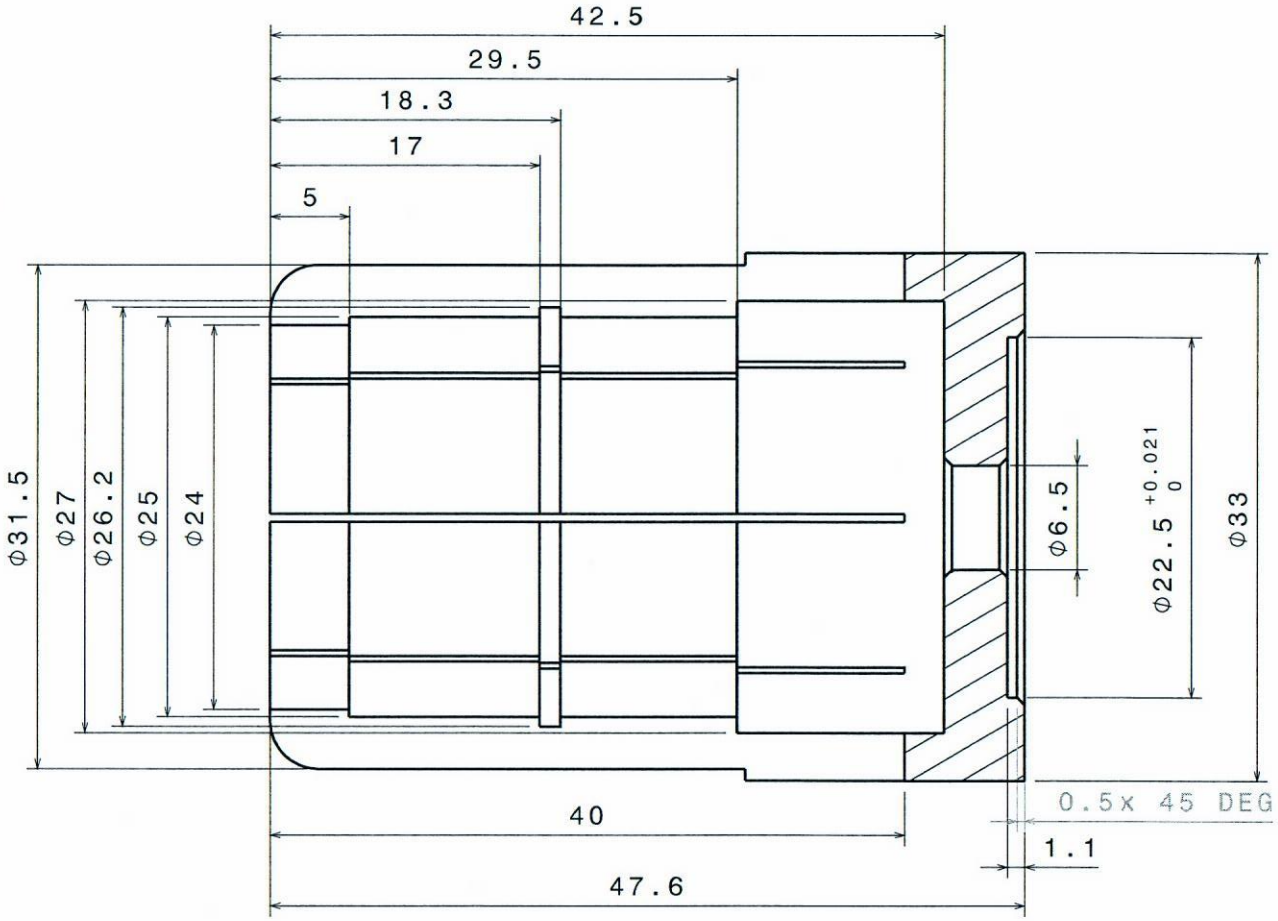

Section view H-H
Scale: 3:1

MATERIAL : BRASS (60 : 40)
QTY: 01 NOS

NOTES:- (1) FILLET ALL EDGES R0.1 UNLESS OTHERWISE NOTED.
(2) SURFACE FINISHING :- 2 DELTA
(3) REMOVE ALL BURRS AND SHARP EDGES
(4) SILVER PLATING OF 50 MICRON

NOTE:SURFACE IRREGULARITIES,SCRATCHES,DENTS AND TOOL MARKS ARE NOT ALLOWED.

DRW DOC ID		RELEASED BY	ITER INDIA (IPR) GANDHINAGAR
LINKED EV5 PT ID		APPROVED BY P.AJESH	CONFIDENTIAL UNLESS AUTHORISED
PBS TITLE		CHECKED BY MANOJ	The information on this drawing is confidential under the terms of the ITER India agreement.This information shall not be transmitted to anyone who is not authorised to receive it.
REV DATE	PT MATURITY / PT VERSION	CONTROLLED BY	DRAWING TITLE I.C. JOINT 3 TO LC TYPE REDUCER ASSEMBLY
SHEET SIZE 420x297	SCALE 1:2 / PT Status	DRAWN BY P AJESH	
THIRD ANGLE PROJECTION	NO.OF SHTS 09	PBS 3 LEVELS	DRAWING NUMBER II/ICH/REDUCER /3-LC/00 / SHEET 07 / REVISION OR STATU

ITER-India

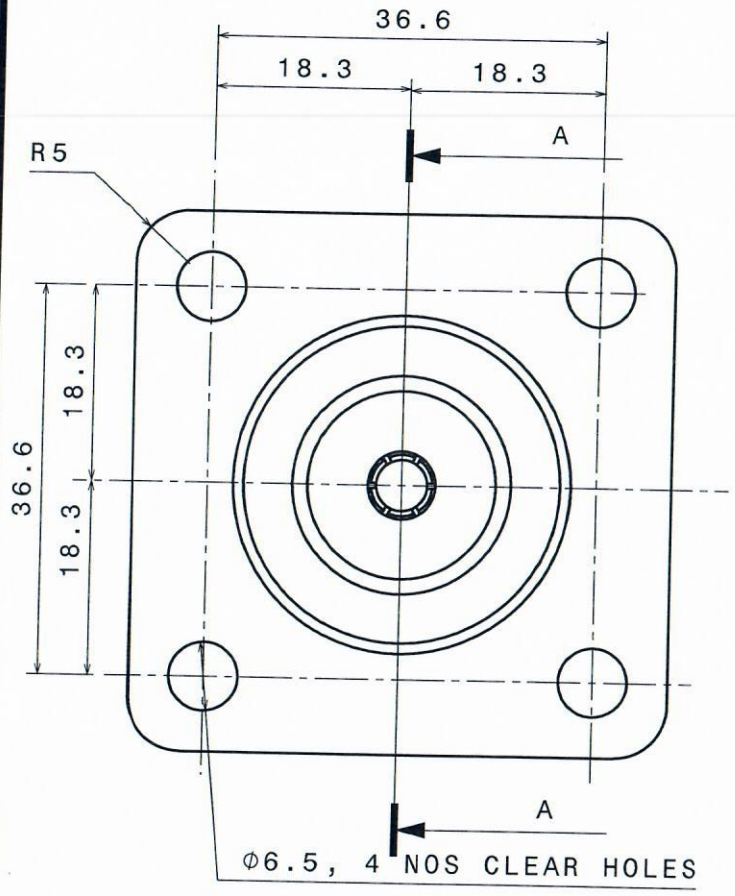

Front view
Scale: 2:1

THREADS 1 1/4 INCH-18, 2A CLASS

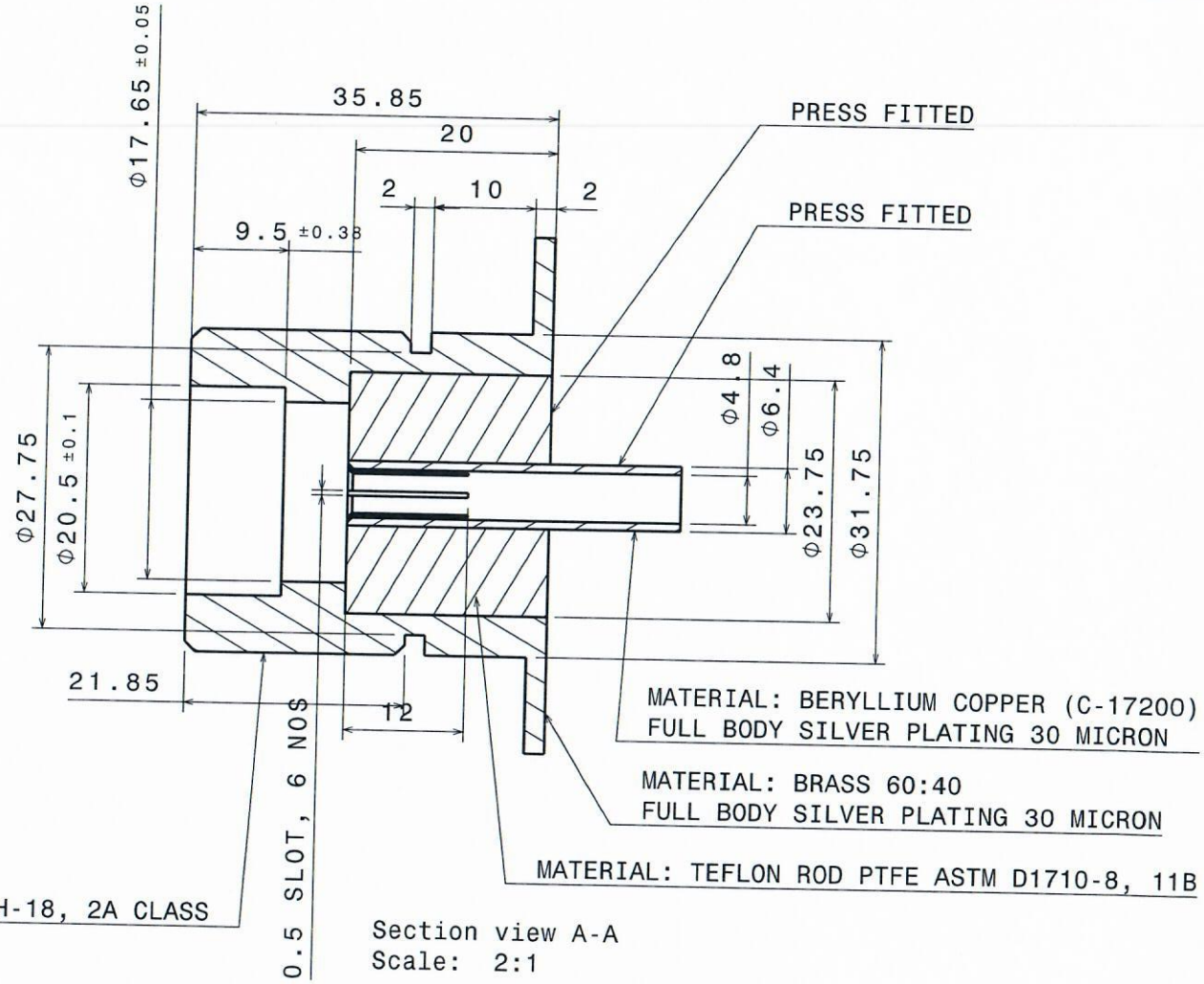

Section view A-A
Scale: 2:1

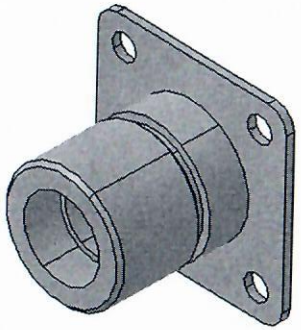

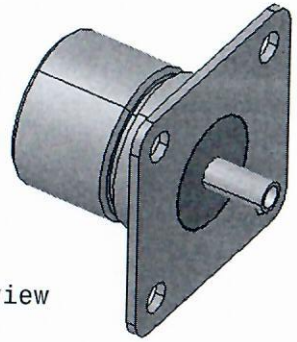

Isometric view
Scale: 1:1

DRW DOC ID		RELEASED BY	ITER INDIA (IPR) GANDHINAGAR
LINKED EV5 PT ID		APPROVED BY: P.AJESH	CONFIDENTIAL UNLESS AUTHORISED — The information on this drawing is confidential under the terms of the ITER India agreement. This information shall not be transmitted to anyone who is not authorised to receive it.
PBS TITLE		CHECKED BY: MANOJ	ITER-India
REV DATE	PT MATURITY / PT VERSION	CONTROLLED BY	DRAWING TITLE: LC CONNECTOR 3 TO LC TYPE REDUCER ASSEMBLY
SHEET SIZE: 420x297	SCALE: 1:1 / PT Status	DRAWN BY: P AJESH	
THIRD ANGLE PROJECTION	NO.OF SHTS: 09	PBS 3 LEVELS	DRAWING NUMBER: II/ICH/REDUCER/3-LC/00 — SHEET 09 — REVISION — DR STATU

Annexure – IV

Engineering drawings

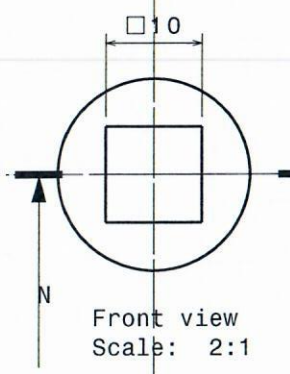

Front view
Scale: 2:1

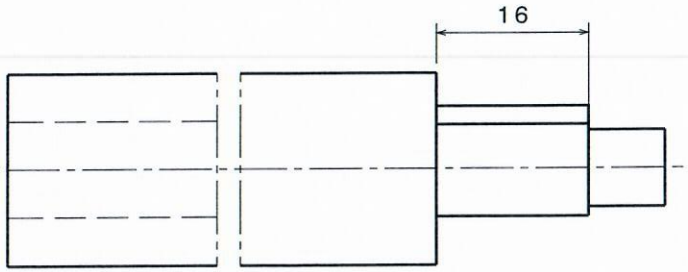

Right view
Scale: 2:1

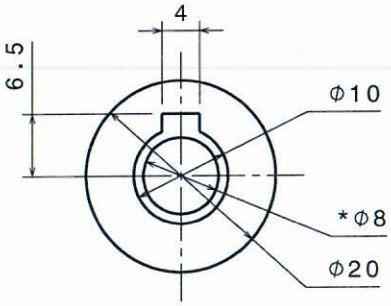

Rear view
Scale: 2:1

Isometric view
Scale: 1:1

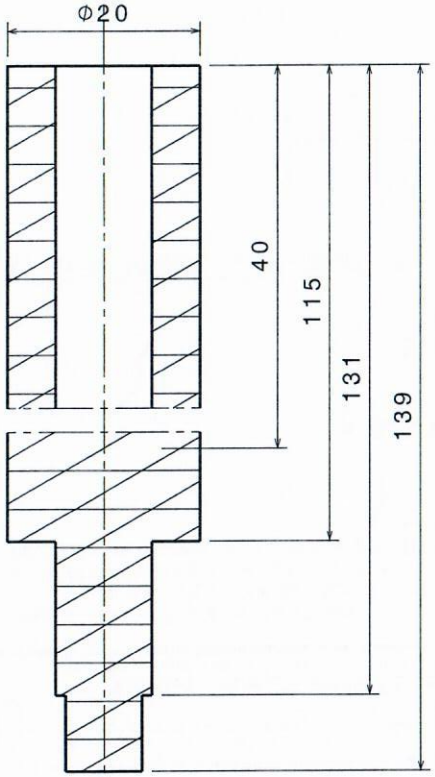

Section view N-N
Scale: 2:1

MATERIAL: ULTEM 2100 STD R
QUANTITY: 01

NOTE:
1.* TO SUIT PRESSFIT WITH SKF BALL BEARING NO 608
2.ALL THREADS INSERT TO BE USED
3.ALL SHARP EDGES TO BE REMOVED AND REPLACED BY CHAMFER OF 1 X 45 DEG
4.FLATNESS VALUES ARE NOT TO EXCEED 3 MM/METER ON ANY UNSPECIFIED SURFACE
5.ROUGHNESS OF ALL UNSPECIFIED SURFACES DO NOT EXCEED Ra 8.3 μm
6.ALL UNSPECIFIED TOLERENCE TO BE CONSIDERED AS PER ISO 2768-1:1989

DRW DOC ID		RELEASED BY	Institute for Plasma Research
LINKED EVS PT ID		APPROVED BY: P AJESH	CONFIDENTIAL UNLESS AUTHORISED
PBS TITLE		CHECKED BY	The information on this drawing is confidential under the terms of the ITER India agreement. This information shall not be transmitted to anyone who is not authorised to receive it.
REV DATE: 01/05/2017	PT MATURITY / PT VERSION	CONTROLLED BY	DRAWING TITLE: GEAR SHAFT INNER CONDUCTOR ASSY 12 INCH 3 PORT SWITCH
SHEET SIZE: -	SCALE: 1:1 / PT Status	DRAWN BY: P AJESH	
THIRD ANGLE PROJECTION	NO.OF SHTS: 18	PBS 3 LEVELS	DRAWING NUMBER: II/ICH/SW/01 — SHEET 14 — REVISION — DR STATU

Spacereservation for the banner
Spacereservation for the banner

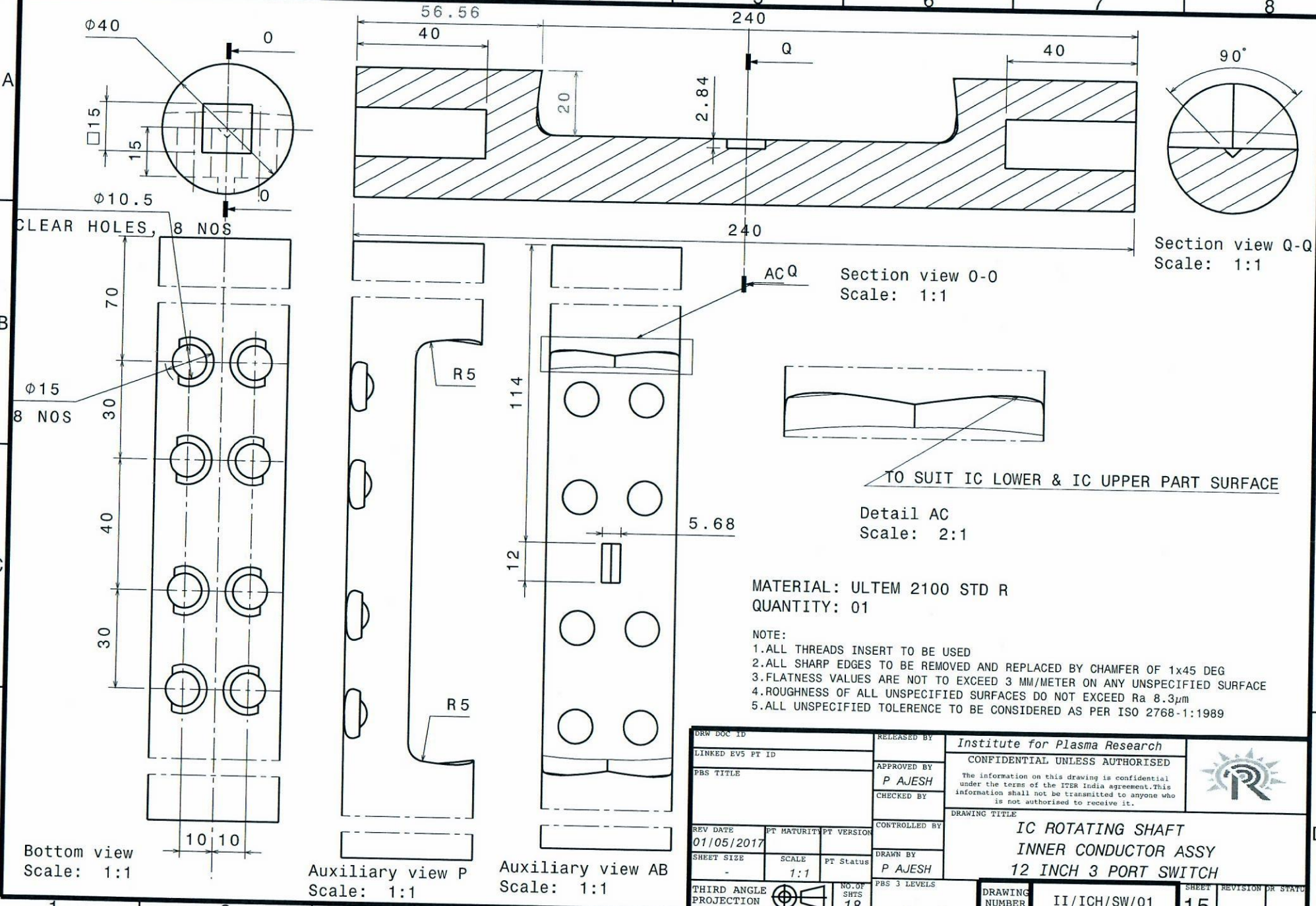

MATERIAL: ULTEM 2100 STD R
QUANTITY: 01

NOTE:
1. ALL THREADS INSERT TO BE USED
2. ALL SHARP EDGES TO BE REMOVED AND REPLACED BY CHAMFER OF 1x45 DEG
3. FLATNESS VALUES ARE NOT TO EXCEED 3 MM/METER ON ANY UNSPECIFIED SURFACE
4. ROUGHNESS OF ALL UNSPECIFIED SURFACES DO NOT EXCEED Ra 8.3μm
5. ALL UNSPECIFIED TOLERENCE TO BE CONSIDERED AS PER ISO 2768-1:1989

DRW DOC ID		RELEASED BY	Institute for Plasma Research
LINKED EV5 PT ID		APPROVED BY: P AJESH	CONFIDENTIAL UNLESS AUTHORISED
PBS TITLE		CHECKED BY	The information on this drawing is confidential under the terms of the ITER India agreement. This information shall not be transmitted to anyone who is not authorised to receive it.
REV DATE: 01/05/2017	PT MATURITY / PT VERSION	CONTROLLED BY	DRAWING TITLE: IC ROTATING SHAFT INNER CONDUCTOR ASSY 12 INCH 3 PORT SWITCH
SHEET SIZE: -	SCALE: 1:1 / PT Status	DRAWN BY: P AJESH	
THIRD ANGLE PROJECTION	NO.OF SHTS: 18	PBS 3 LEVELS	DRAWING NUMBER: II/ICH/SW/01 · SHEET: 15 · REVISION OR STATU

Spacereservation for the banner

Spacereservation for the banner

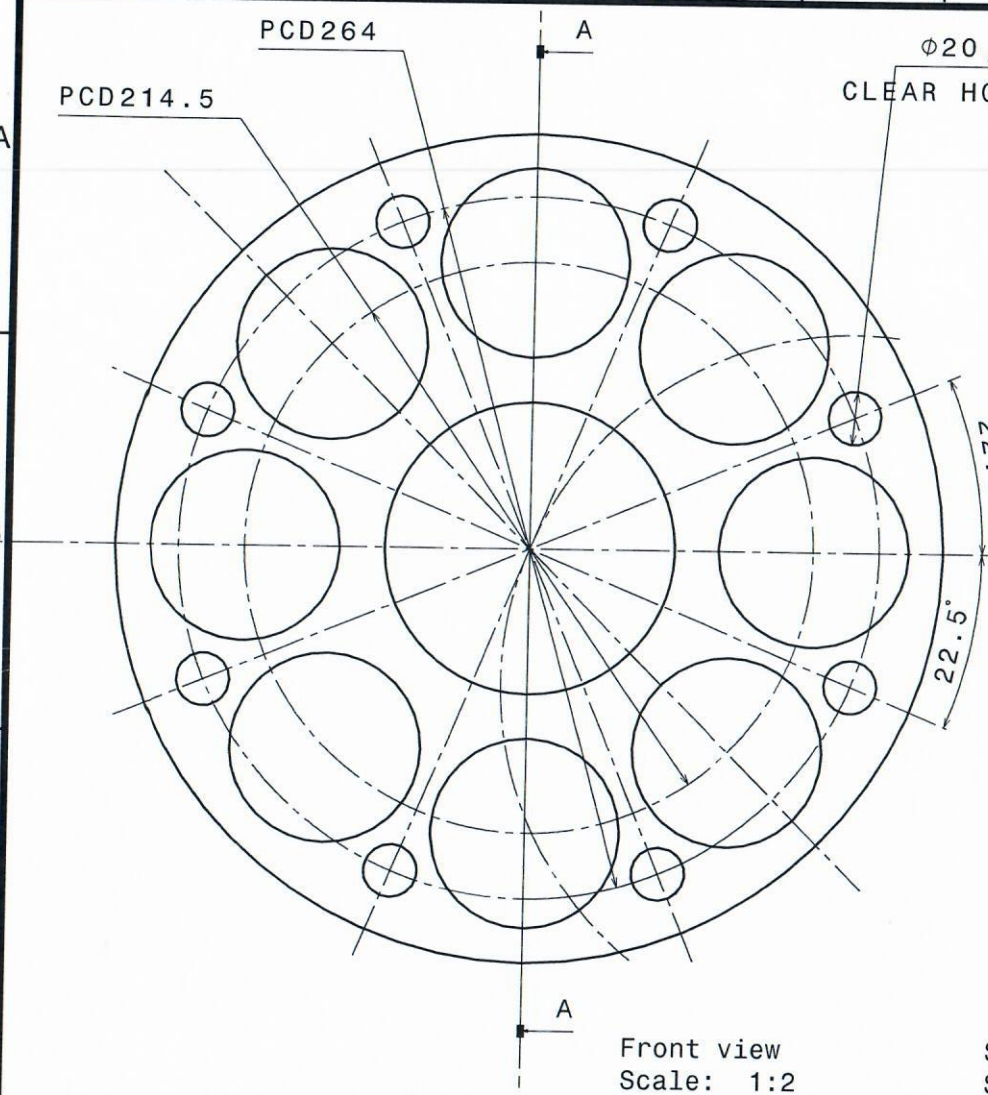

Front view
Scale: 1:2

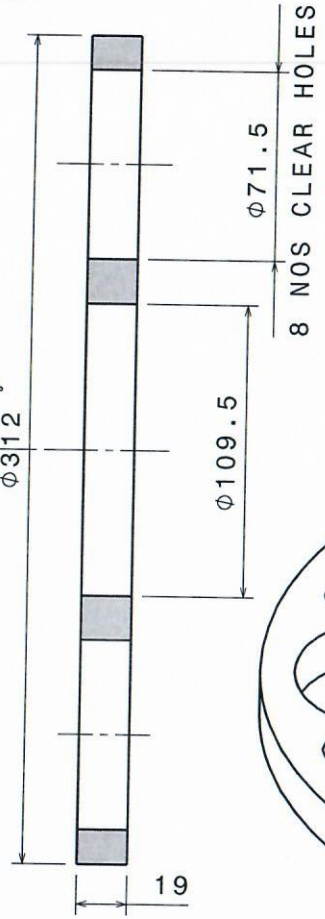

Section view A-A
Scale: 1:2

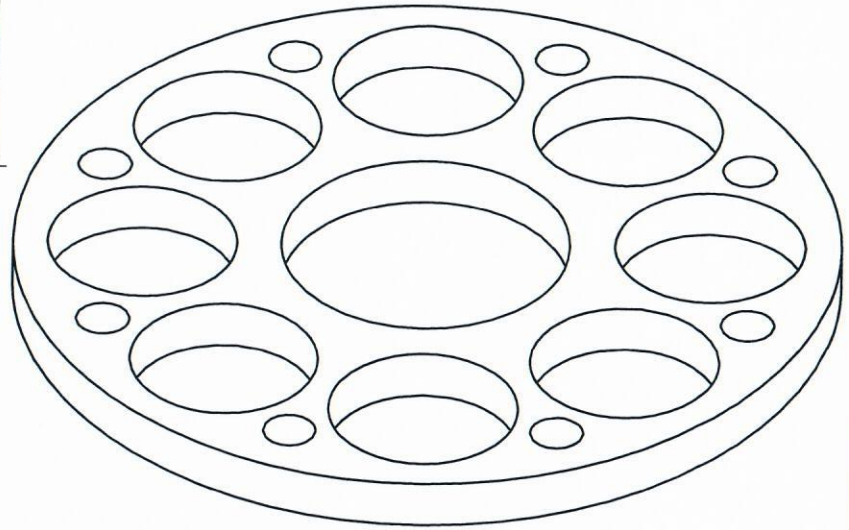

Isometric view
Scale: 1:2

MATERIAL : DERLIN 100P
QTY: 03

NOTE:
1. ALL THREADS INSERT TO BE USED
2. ALL SHARP EDGES TO BE REMOVED AND REPLACED BY CHAMFER OF 1x45 DEG
3. FLATNESS VALUES ARE NOT TO EXCEED 3 MM/METER ON ANY UNSPECIFIED SURFACE
4. ROUGHNESS OF ALL UNSPECIFIED SURFACES DO NOT EXCEED Ra 8.3μm
5. ALL UNSPECIFIED TOLERENCE TO BE CONSIDERED AS PER ISO 2768-1:1989

DRW DOC ID		RELEASED BY	Institute for Plasma Research
LINKED EV5 PT ID		APPROVED BY: P AJESH	CONFIDENTIAL UNLESS AUTHORISED
PBS TITLE		CHECKED BY	The information on this drawing is confidential under the terms of the ITER India agreement. This information shall not be transmitted to anyone who is not authorised to receive it.
REV DATE: 01/05/2017	PT MATURITY / PT VERSION	CONTROLLED BY	DRAWING TITLE: DISK
SHEET SIZE: -	SCALE: NTS / PT Status	DRAWN BY: P AJESH	12_INCH 3 PORT SWITCH
THIRD ANGLE PROJECTION	NO.OF SHTS: 06	PBS 3 LEVELS	DRAWING NUMBER: II/ICH/SW/03 · SHEET: 02 · REVISION · DR STATU